TOP

Wall- and ceiling-mounted unit heaters

Technical catalogue

KAMPMANN

Kampmann.co.uk/top

Contents

TOP: wall and ceiling-mounted unit heaters. The warm air solution for almost all hall requirements.

TOP unit heaters for excellent climate in the high-bay warehouse and loading area. Spedition Metzger, Neu-Kupfer, Germany

01 Product information

TOP – Temperature-controlled air. As much as you need.

TOP unit heaters – "TOP" in terms of money and performance – essentially meet the demand for economical and controllable air handling.
TOP unit heaters are all-purpose units for wall or ceiling installation.

A comprehensive range of modular accessories enable it to be adapted to technical requirements, as well as to different applications and room conditions. The visually attractive self-supporting housing is sendzimir galvanised and can be powder-coated on request.
For optimum decentralised heating and ventilation of

- factories
- warehouses
- industrial or commercial workshops
- sports halls
- showrooms
- greenhouses
- buildings supplied by district heating or with high temperature differences (barracks etc.)
- premises at risk from explosion
- buildings with steam heating systems

Featuring a housing made of sendzimir galvanised sheet steel with brackets fitted as standard, TOP unit heaters are ideal for wall-mounting as well as ceiling-mounting. Their standard equipment also includes a single-row louvre and motor guard.

Operating principle

Air is drawn in through the whisper-quiet sickle-blade fan and is blown through the heat exchanger into the room. Models with large heat exchanger capacity are ideal for use with low water temperatures.

Air guidance

TOP unit heaters are supplied as standard with a single-row louvre. The air can optionally be discharged through a double-row louvre or other air diffuser, available as accessories.

Example of wall-mounted heating unit

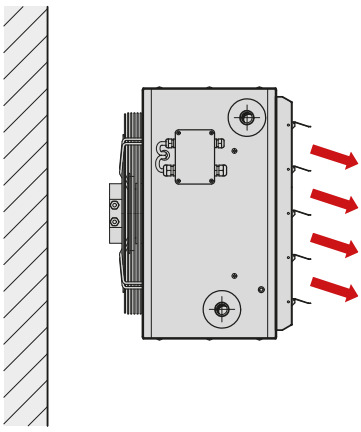

Example of ceiling-mounted heating unit

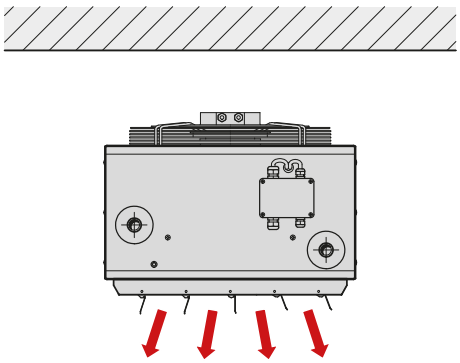

Product data

Product benefits

- A wide range of models to meet every design need - "TOP" in terms of price and performance
- Whisper-quiet sickle-blade fan with energy-efficient EC technology complies with ErP requirements
- Heat exchanger and fan options for the most diverse applications
- Neutral in colour, hard-wearing and tough
- Electromechanical control or KaControl system possible
- Possible integration into KaControl networks or building automation systems, like BACnet, Modbus or LON
- Single-row ceiling or wall louvre and motor guard as standard
- Hybrid ECO system module for decentralised temperature control
- Recirculating air accessories are possible (mixed air and primary air accessories on request)

Features

- Continuously variable EC motor, 2-stage three-phase motor or 1-stage single-phase motor (Ex-e protected on request)
- Different air outlets are available
- Primary air version is available
- Unit and accessories available powder coated in RAL colours
- Extensive range of control accessories

Installation	Wall or ceiling installation (model size 8 ceiling installation only)
Air stream	Recirculating air Mixed air and primary air (on request)
Heating	LPHW LPHW Thermal oil Steam (on request)
Cooling	On request (TOP C)
Hybrid Eco	In conjunction with primary or secondary air spigots, on request
KaControl	Optional

Performance data

Heat output [kW][1]	4.5 – 89.2
Air flow [m³/h]	260 – 12230
Sound pressure level [dB(A)][2]	10 – 66
Sound power level [dB(A)]	26 – 82

[1] at LPHW 75/65 °C, t_{L1} = 20 °C
[2] The sound pressure levels were calculated with an assumed room insulation of 16 dB(A). This corresponds to a distance of 5 m, a room volume of 3000 m³ and a reverberation time of 2.0 s (in accordance with VDI 2081).

Operating limits

- Max. operating pressure: 16 bar
- Max. entering water temperature: 120 °C
- Min. entering water temperature: 35 °C
- Inlet air temperature: 40 °C
- Max. glycol volume: 50 %
- Models for higher operating conditions available on request

Applications

Buildings of all kinds, which are to be ideally heated and ventilated with centralised or decentralised control.

Selection guide

Fan version	Model size	Dimensions (AxBxC) [mm]	Heat exchanger model: copper/aluminium Heat output[1] [kW]	copper/aluminium Air flow [m³/h]	steel, galvanised Heat output[1] [kW]	steel, galvanised Air flow [m³/h]	steel, galvanised cross-counterflow Heat output[2] [kW]	steel, galvanised cross-counterflow Air flow [m³/h]
EC fan, 230 V, high speed	4	540 x 500 x 320	6.4 – 18.5	520 – 2720	6.0 – 18.2	550 – 2770	4.4 – 13.4	550 – 2770
	5	640 x 600 x 320	4.5 – 37.0	260 – 4860	7.4 – 33.6	640 – 4800	5.9 – 21.7	640 – 4800
	6	740 x 700 x 320	7.0 – 48.5	430 – 6900	9.6 – 43.8	790 – 5860	7.6 – 31.1	790 – 5860
	7	840 x 800 x 360	14.2 – 71.0	970 – 9680	14.4 – 58.9	1180 – 8900	14.2 – 49.2	1180 – 8900
	8	940 x 900 x 670	19.1 – 89.0	1370 – 11800	19.2 – 89.2	1920 – 12230	---	---
EC fan, 230 V, reduced speed	4	540 x 500 x 320	5.7 – 15.4	450 – 2210	5.4 – 15.1	480 – 2200	3.9 – 11.7	480 – 2200
	5	640 x 600 x 320	6.6 – 26.0	480 – 3370	9.1 – 24.8	850 – 3420	7.5 – 17.8	850 – 3420
	7	840 x 800 x 360	10.6 – 55.8	590 – 7820	12.0 – 46.5	910 – 7070	12.3 – 41.3	910 – 7070

[1] at LPHW 75/65 °C, t_{L1} = 20 °C
[2] at LPHW 80/40 °C, t_{L1} = 20 °C

Technical drawing (Dimensions in mm)

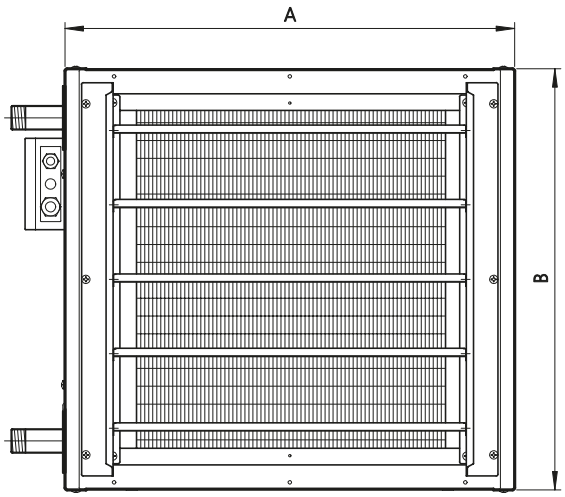

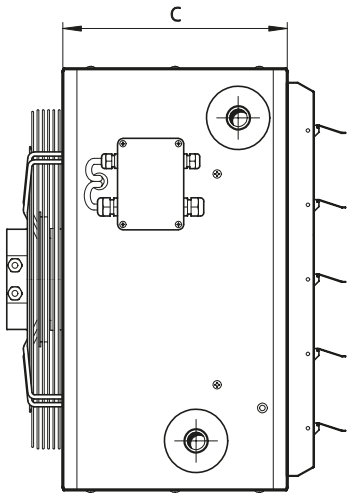

TOP at a glance

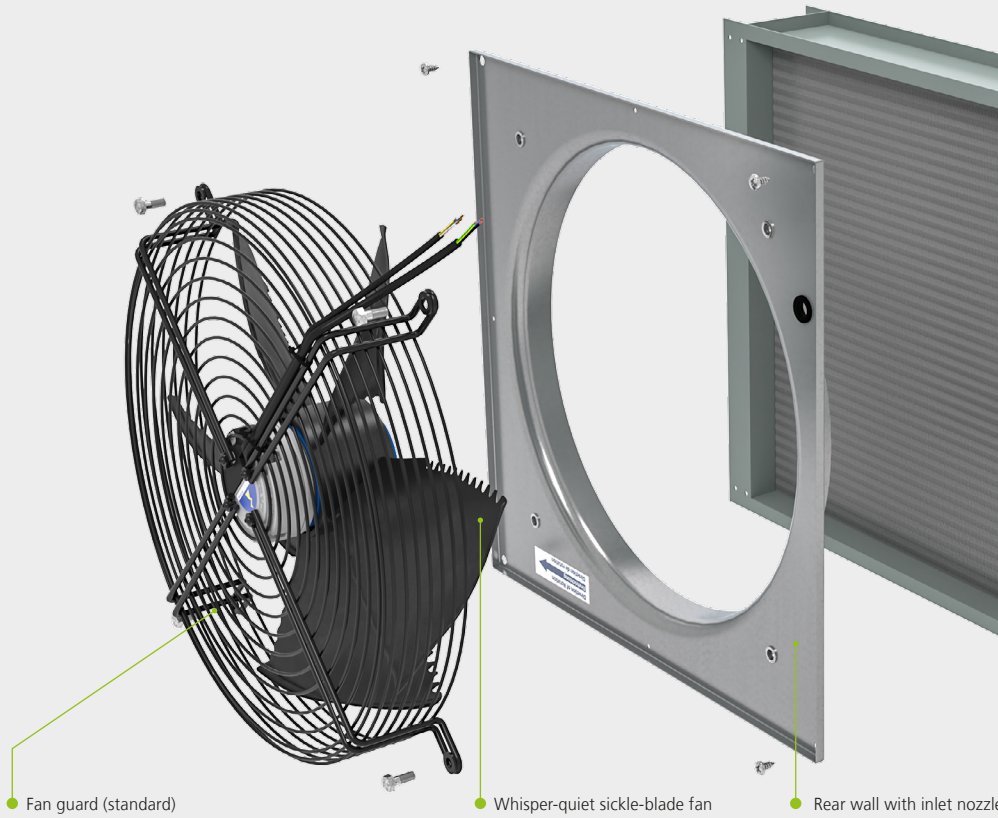

Features

1 Fan guard (standard):
- screw-fixed as standard with whisper-quiet sickle-blade fan

2 Whisper-quiet, sickle-blade fan, ErP 2015-compliant:
- continuously variable EC single-phase whisper-quiet sickle-blade fan
- excellent efficiency due to the aerodynamic design of the rotor housing
- motor protection: IP 54
- balanced at two levels; balancing quality according to G6, 3 DIN ISO 1940 Part 1
- external rotor motor integrated in the fan impeller
- complies with Directive (EU) 327/2011 ("LOT 11")

3 Rear wall with inlet nozzle:
- inlet nozzle optimised to the flow characteristics of the fan

4 Heat exchanger:
- copper/aluminium heat exchanger, especially lightweight, with high heat outputs from minimal dimensions
- galvanised steel
- galvanised steel, cross-counterflow
- suitable for low temperature heating systems and LPHW heating systems
- steel distributor and collector

5 Unit heater housing:
- self-supporting, made of galvanized sheet steel
- standard fixing holes for wall or ceiling-mounting
- resistant to damage
- shallow depth, ideal for the simple attachment of outlet-side accessories
- powder-coated versions, e.g. to match the colour of the building ceiling on request

6 Single-row air louvre (standard):
- for wall or ceiling-mounting
- achieves excellent throw

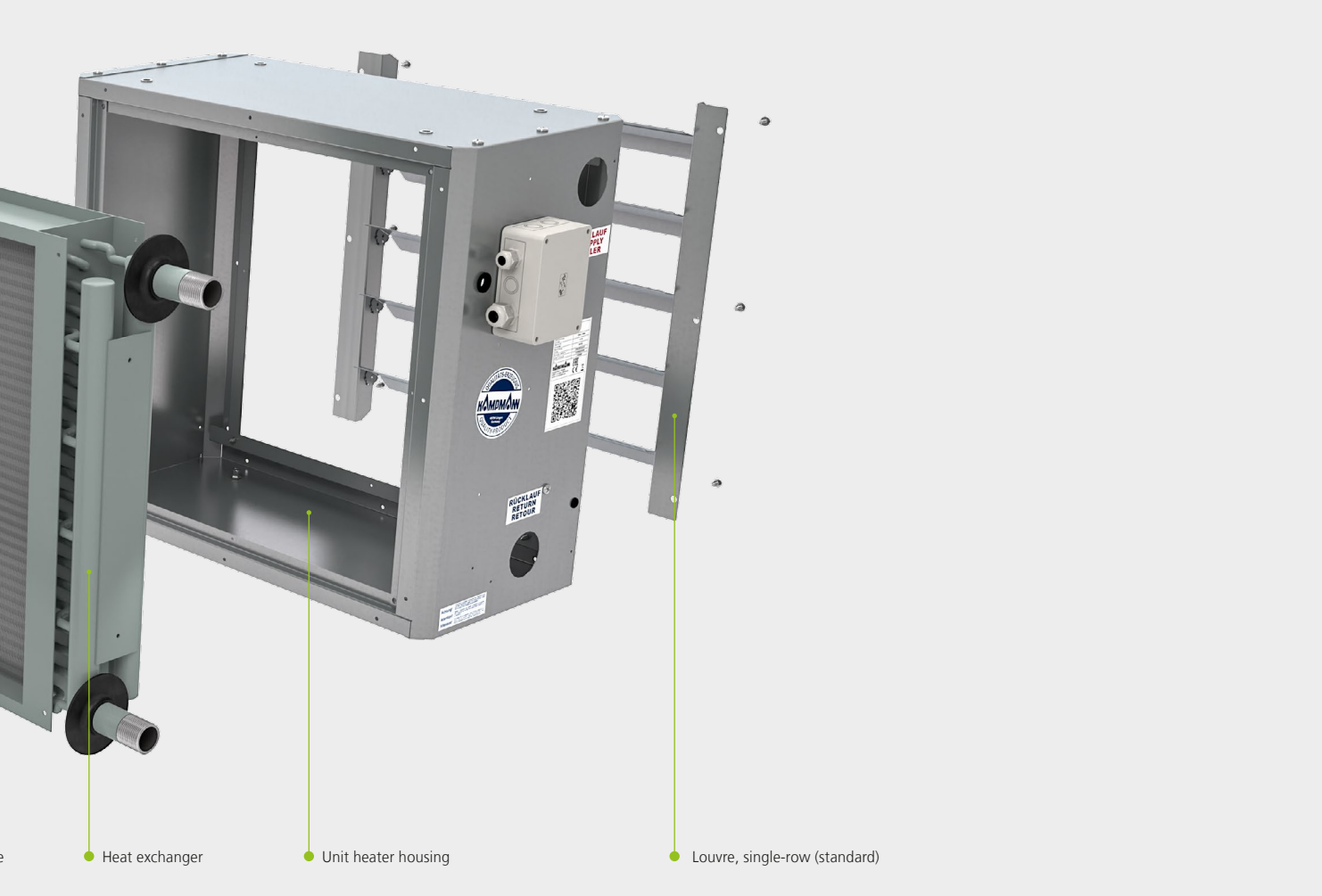

TOP model 48

View from below

Plan view

02 Technical data

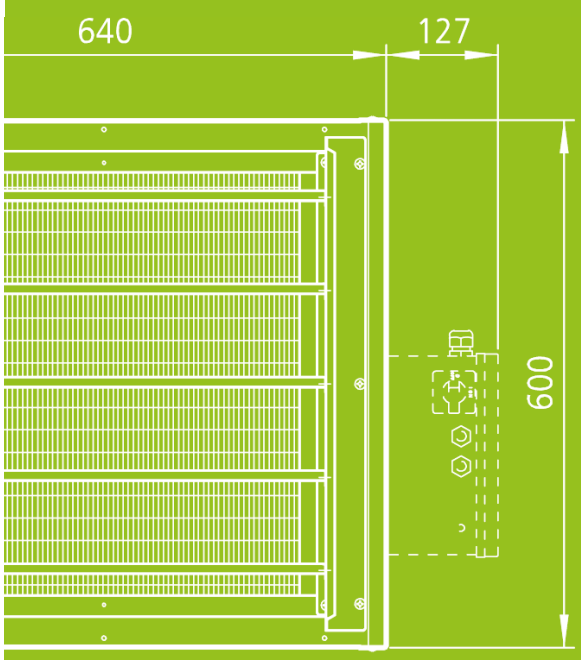

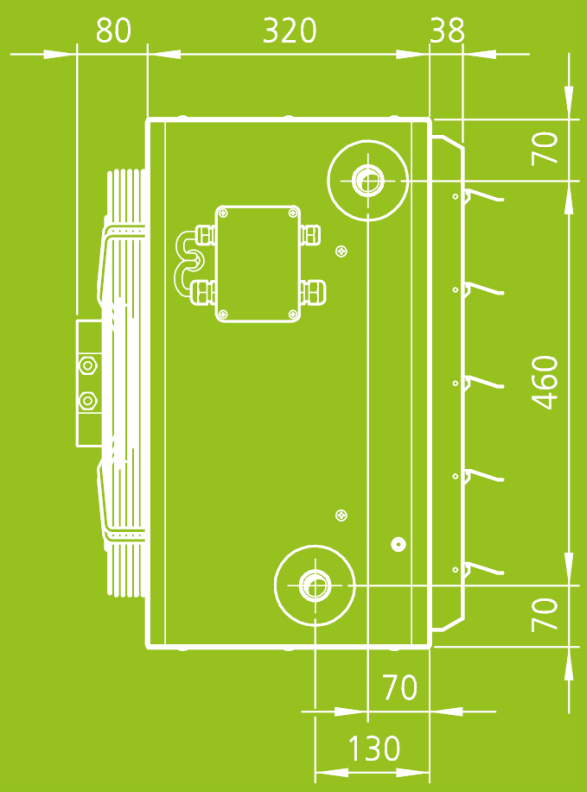

General

EU Directive 2009/125/EU

Compliance with the Energy-related Products Directive 2015

The European Commission's ErP Directive ("Energy-related Products") evaluates and modifies the requirements of technical products in energy-related applications.
According to the Directive (EU) 327/2011 ("LOT 11"), the efficiency requirements have become more stringent for fans with an electric drive output of 125 watts to 500 kilowatts. A number of fans can no longer be marketed since the second stage entered into force on 1st January 2015.
The inlet nozzle used in the unit must be taken into account along with the fan, in terms of energy.

The TOP range of unit heaters is solely fitted with ErP- ompliant fans. The conformity of the TOP range has been laboratory-tested and proved. The measurements can be provided on request.
The TOP unit heater range and components used are produced and tested in line with the applicable state of the art. The requirements of the applicable norms, e.g. Machinery Directive, EN 60335 (Safety of Electrical Equipment) and EMC are all met.

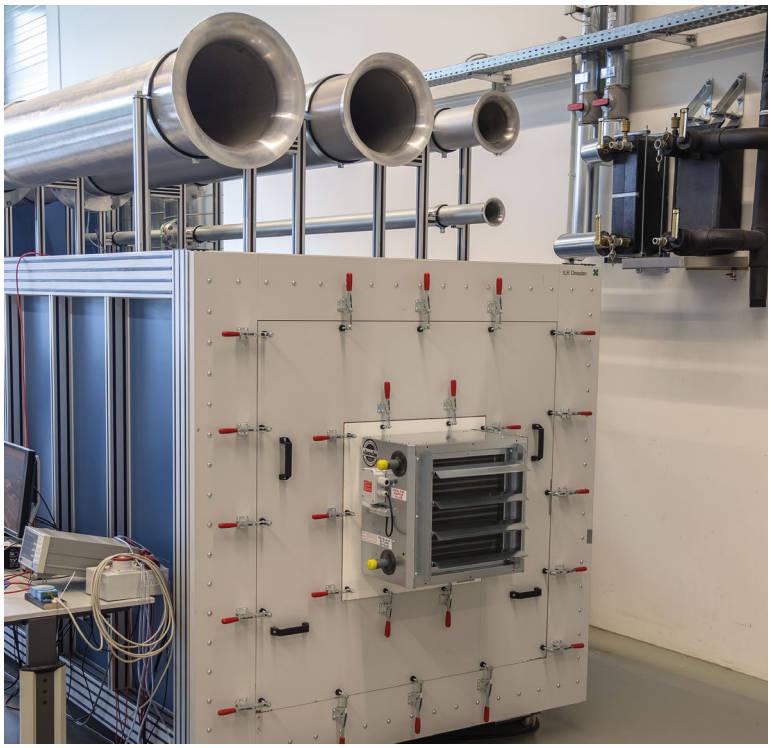

Test chamber for air performance measurements according to DIN EN ISO 5801, Kampmann R & D Centre

TOP

Heat exchanger copper/aluminium
Model size 4
EC fan, 230 V, high speed

Technical drawing (Dimensions in mm)

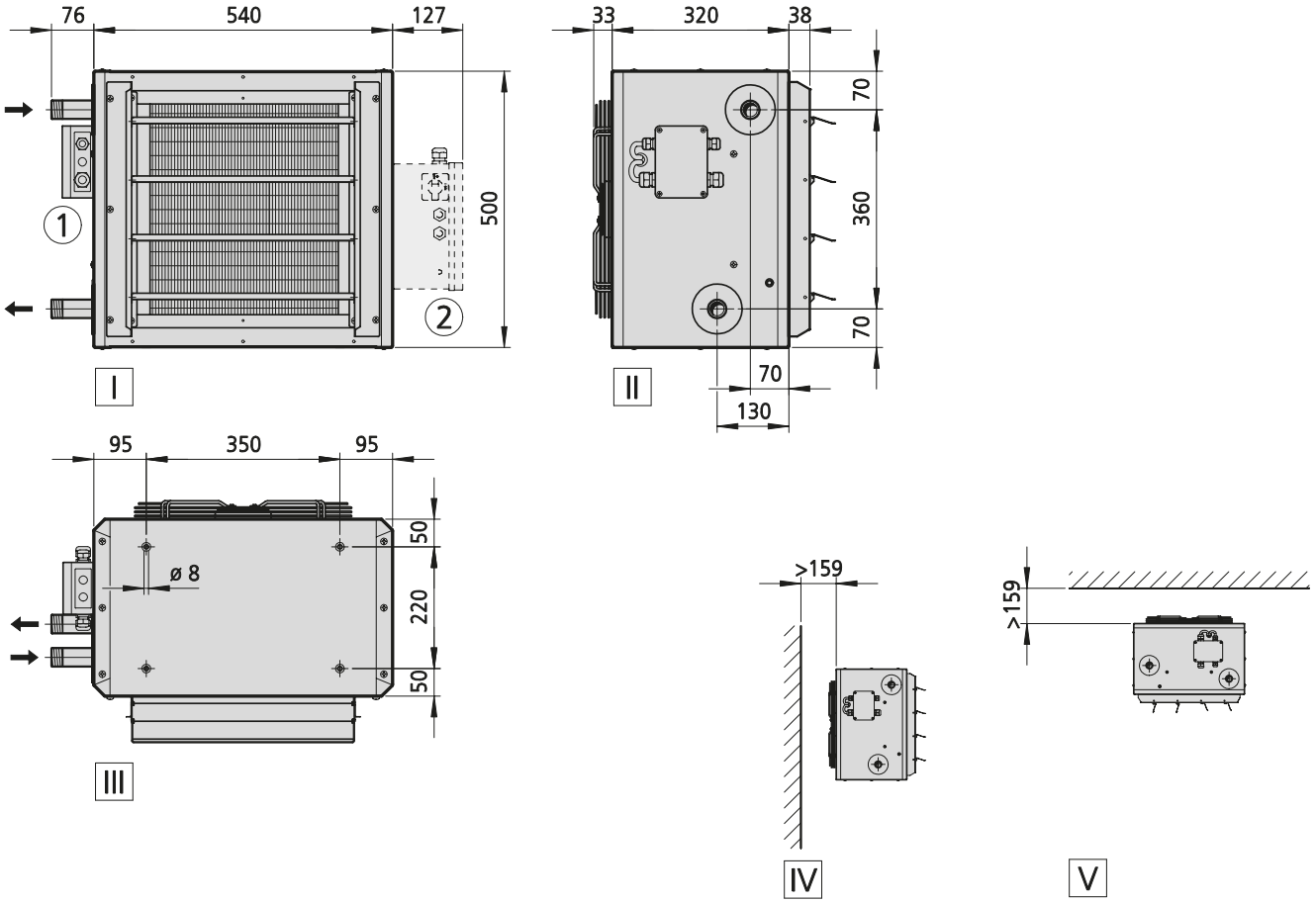

View
I Front view
II Side view
III Top view
IV Wall-mounted
V Ceiling-mounted

More information
1 Electrical connection for EC model, electromechanical
2 Electrical connection for EC model with KaControl (optional)

Specifications

Type	Weight [kg]	Water content [l]	Connection
442058	23	1.6	1″
443058	22	2.1	1″
444058	24	2.6	1″

Performance data

Type	Inlet air temperature	Control voltage	Heat output[1]	Outlet air temperature	Air flow	Nominal fan speed	Power consumption	Amperage	Throw (wall-mounted)	Maximum installation height when ceiling-mounted					Sound pressure level[2]	Sound power level
										Louvre	Air diffuser	Outlet nozzle	Induction louvre	KaMAX, vertical slat position		
	[°C]	[V]	[kW]	[°C]	[m³/h]	[1/min]	[W]	[A]	[m]	[m]	[m]	[m]	[m]	[m]	[dB(A)]	[dB(A)]
442058	20	10	12.9	34.4	2720	1520	165	1.5	21.0	6.1	3.9	8.7	8.7	9.9	57	73
		8	11.7	35.5	2270	1290	99	1.0	18.0	5.4	3.5	7.7	7.7	8.7	52	68
		6	10.0	37.6	1710	1000	46	0.5	13.0	4.5	3.0	6.3	6.3	7.2	46	62
		4	8.3	40.8	1200	735	22	0.3	9.0	3.6	2.4	5.0	5.0	5.6	38	54
		2	6.8	42.0	790	525	12	0.2	6.0	2.8	---	3.7	3.7	4.2	29	45
443058	20	10	15.2	38.7	2460	1520	165	1.5	19.0	5.7	3.7	8.1	8.1	9.2	55	71
		8	13.6	40.0	2050	1290	99	1.0	16.0	5.1	3.3	7.1	7.1	8.1	50	66
		6	11.3	42.3	1530	1000	46	0.5	12.0	4.2	2.8	5.9	5.9	6.6	44	60
		4	9.1	46.2	1050	735	22	0.3	8.0	3.3	2.3	4.5	4.5	5.1	36	52
		2	7.3	47.6	680	525	12	0.2	5.0	2.5	---	3.4	3.4	3.8	27	43
444058	20	10	18.5	47.4	2040	1520	165	1.5	16.0	5.1	3.3	7.1	7.1	8.1	53	69
		8	15.8	48.3	1690	1290	99	1.0	13.0	4.5	3.0	6.3	6.3	7.1	48	64
		6	12.3	49.9	1250	1000	46	0.5	10.0	3.7	2.5	5.1	5.1	5.8	42	58
		4	9.0	52.4	840	735	22	0.3	6.0	2.9	---	3.9	3.9	4.4	34	50
		2	6.4	53.3	520	525	12	0.2	4.0	---	---	2.8	2.8	3.1	25	41

Use our calculation tools on our website to easily calculate heat outputs and other technical data with just a few clicks!
▸ https://www.kampmann.co.uk/hvac/products/unit-heaters/top#Calculate-performance-data

[1] at LPHW 75/65 °C, t_{L1} = 20 °C
[2] The sound pressure levels were calculated with an assumed room insulation of 16 dB(A). This corresponds to a distance of 5 m, a room volume of 3000 m³ and a reverberation time of 2.0 s (in accordance with VDI 2081).

TOP

Heat exchanger copper/aluminium
Model size 4
EC fan, 230 V, reduced speed

Technical drawing (Dimensions in mm)

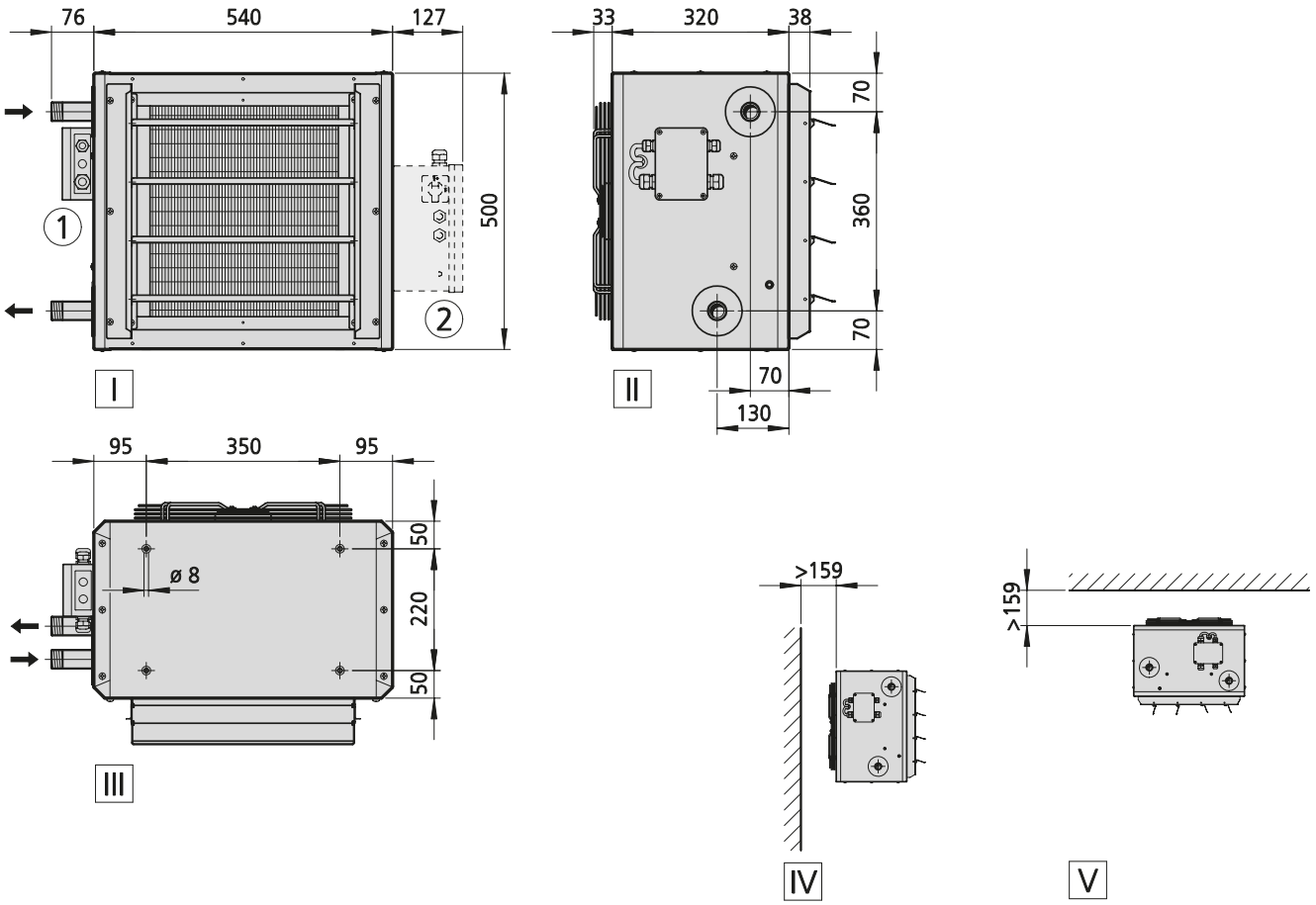

View
I Front view
II Side view
III Top view
IV Wall-mounted
V Ceiling-mounted

More information
1 Electrical connection for EC model, electromechanical
2 Electrical connection for EC model with KaControl (optional)

Specifications

Type	Weight [kg]	Water content [l]	Connection
442056	22	1.6	1″
443056	22	2.1	1″
444056	24	2.6	1″

Performance data

Type	Inlet air temperature	Control voltage	Heat output[1]	Outlet air temperature	Air flow	Nominal fan speed	Power consumption	Amperage	Throw (wall-mounted)	Maximum installation height when ceiling-mounted					Sound pressure level[2]	Sound power level
										Louvre	Air diffuser	Outlet nozzle	Induction louvre	KaMAX, vertical slat position		
	[°C]	[V]	[kW]	[°C]	[m³/h]	[1/min]	[W]	[A]	[m]	[m]	[m]	[m]	[m]	[m]	[dB(A)]	[dB(A)]
442056	20	10	11.5	35.7	2210	1410	124	1.2	17.0	5.3	3.5	7.5	7.5	8.6	55	71
		8	10.2	37.2	1790	1150	64	0.7	14.0	4.7	3.1	6.5	6.5	7.4	50	66
		6	8.9	39.3	1390	905	32	0.4	11.0	4.0	2.7	5.5	5.5	6.2	43	59
		4	7.6	42.8	1000	665	14	0.2	8.0	3.2	---	4.4	4.4	4.9	35	51
		2	6.5	43.9	700	480	7	0.1	5.0	2.6	---	3.4	3.4	3.8	26	42
443056	20	10	13.3	40.2	1980	1410	124	1.2	15.0	5.0	3.3	7.0	7.0	7.9	53	69
		8	11.6	42.0	1600	1150	64	0.7	12.0	4.3	2.9	6.0	6.0	6.8	48	64
		6	10.0	44.4	1230	905	32	0.4	10.0	3.7	2.5	5.0	5.0	5.7	41	57
		4	8.3	48.6	880	665	14	0.2	7.0	3.0	---	4.0	4.0	4.5	33	49
		2	7.0	49.9	600	480	7	0.1	5.0	2.3	---	3.1	3.1	3.5	24	40
444056	20	10	15.4	48.4	1640	1410	124	1.2	13.0	4.4	2.9	6.1	6.1	7.0	51	67
		8	12.8	49.6	1300	1150	64	0.7	10.0	3.8	2.6	5.2	5.2	5.9	46	62
		6	10.3	51.2	990	905	32	0.4	8.0	3.2	---	4.4	4.4	4.9	39	55
		4	7.7	54.0	680	665	14	0.2	5.0	2.5	---	3.4	3.4	3.8	31	47
		2	5.7	54.9	450	480	7	0.1	3.0	---	---	2.5	2.5	2.8	22	38

Use our calculation tools on our website to easily calculate heat outputs and other technical data with just a few clicks!
▸ https://www.kampmann.co.uk/hvac/products/unit-heaters/top#Calculate-performance-data

[1] at LPHW 75/65 °C, t_{L1} = 20 °C
[2] The sound pressure levels were calculated with an assumed room insulation of 16 dB(A). This corresponds to a distance of 5 m, a room volume of 3000 m³ and a reverberation time of 2.0 s (in accordance with VDI 2081).

TOP

Heat exchanger steel, galvanised
Model size 4
EC fan, 230 V, high speed

Technical drawing (Dimensions in mm)

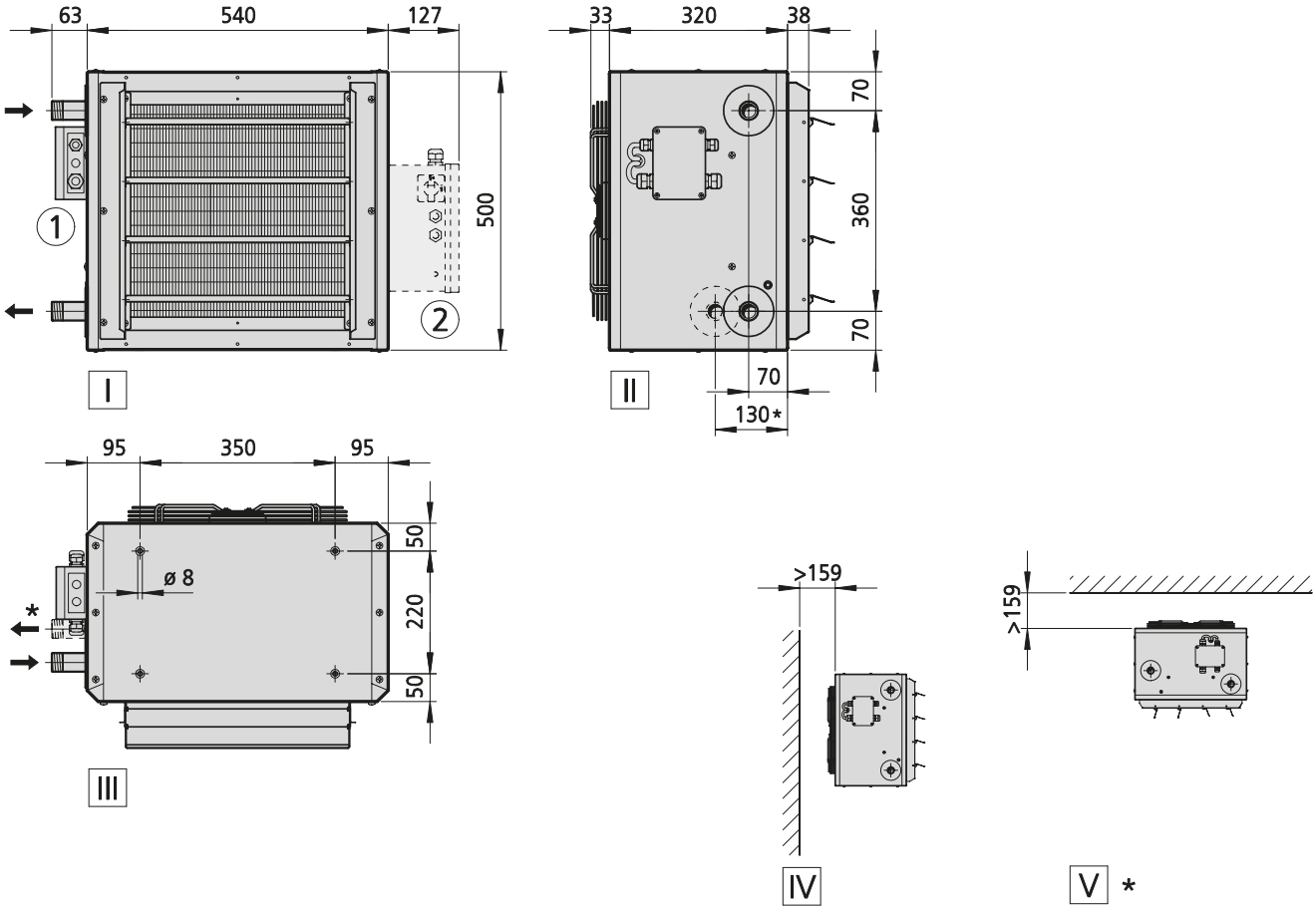

View
- I Front view
- II Side view, 1-layer heat exchanger (* = 2-layer)
- III Top view, 1-layer heat exchanger (* = 2-layer)
- IV Wall-mounted, 1-layer heat exchanger
- V Ceiling-mounted, 2-layer heat exchanger

More information
- 1 Electrical connection for EC model, electromechanical
- 2 Electrical connection for EC model with KaControl (optional)

Specifications

Type	Weight [kg]	Water content [l]	Connection
442158	41	1.6	1″
443158	51	2.1	1″
444158	61	2.6	1″

Performance data

Type	Inlet air temperature	Control voltage	Heat output[1]	Outlet air temperature	Air flow	Nominal fan speed	Power consumption	Amperage	Throw (wall-mounted)	Maximum installation height when ceiling-mounted					Sound pressure level[2]	Sound power level
										Louvre	Air diffuser	Outlet nozzle	Induction louvre	KaMAX, vertical slat position		
	[°C]	[V]	[kW]	[°C]	[m³/h]	[1/min]	[W]	[A]	[m]	[m]	[m]	[m]	[m]	[m]	[dB(A)]	[dB(A)]
442158	20	10	12.5	33.6	2770	1520	165	1.5	22.0	6.1	4.0	8.8	8.8	10.0	58	74
		8	11.2	34.8	2280	1290	99	1.0	18.0	5.4	3.5	7.7	7.7	8.8	53	69
		6	9.4	37.0	1660	1000	46	0.5	13.0	4.4	2.9	6.2	6.2	7.0	47	63
		4	7.6	40.8	1100	735	22	0.3	8.0	3.4	2.3	4.7	4.7	5.3	39	55
		2	6.0	42.0	650	525	12	0.2	5.0	2.4	---	3.3	3.3	3.7	30	46
443158	20	10	14.9	36.2	2770	1520	165	1.5	22.0	6.1	4.0	8.8	8.8	10.0	57	73
		8	13.1	37.4	2280	1290	99	1.0	18.0	5.4	3.5	7.7	7.7	8.8	52	68
		6	10.7	39.5	1660	1000	46	0.5	13.0	4.4	2.9	6.2	6.2	7.0	46	62
		4	8.4	43.2	1100	735	22	0.3	8.0	3.4	2.3	4.7	4.7	5.3	38	54
		2	6.5	44.4	650	525	12	0.2	5.0	2.4	---	3.3	3.3	3.7	29	45
444158	20	10	18.2	44.3	2260	1520	165	1.5	18.0	5.4	3.5	7.6	7.6	8.7	55	71
		8	15.5	45.1	1860	1290	99	1.0	14.0	4.8	3.2	6.7	6.7	7.6	50	66
		6	12.0	46.5	1370	1000	46	0.5	11.0	3.9	2.6	5.4	5.4	6.1	44	60
		4	8.7	48.7	910	735	22	0.3	7.0	3.0	---	4.1	4.1	4.6	36	52
		2	6.0	49.5	550	525	12	0.2	4.0	---	---	2.9	2.9	3.3	27	43

Use our calculation tools on our website to easily calculate heat outputs and other technical data with just a few clicks!
▸ https://www.kampmann.co.uk/hvac/products/unit-heaters/top#Calculate-performance-data

[1] at LPHW 75/65 °C, t_{L1} = 20 °C
[2] The sound pressure levels were calculated with an assumed room insulation of 16 dB(A). This corresponds to a distance of 5 m, a room volume of 3000 m³ and a reverberation time of 2.0 s (in accordance with VDI 2081).

TOP

Heat exchanger steel, galvanised
Model size 4
EC fan, 230 V, reduced speed

Technical drawing (Dimensions in mm)

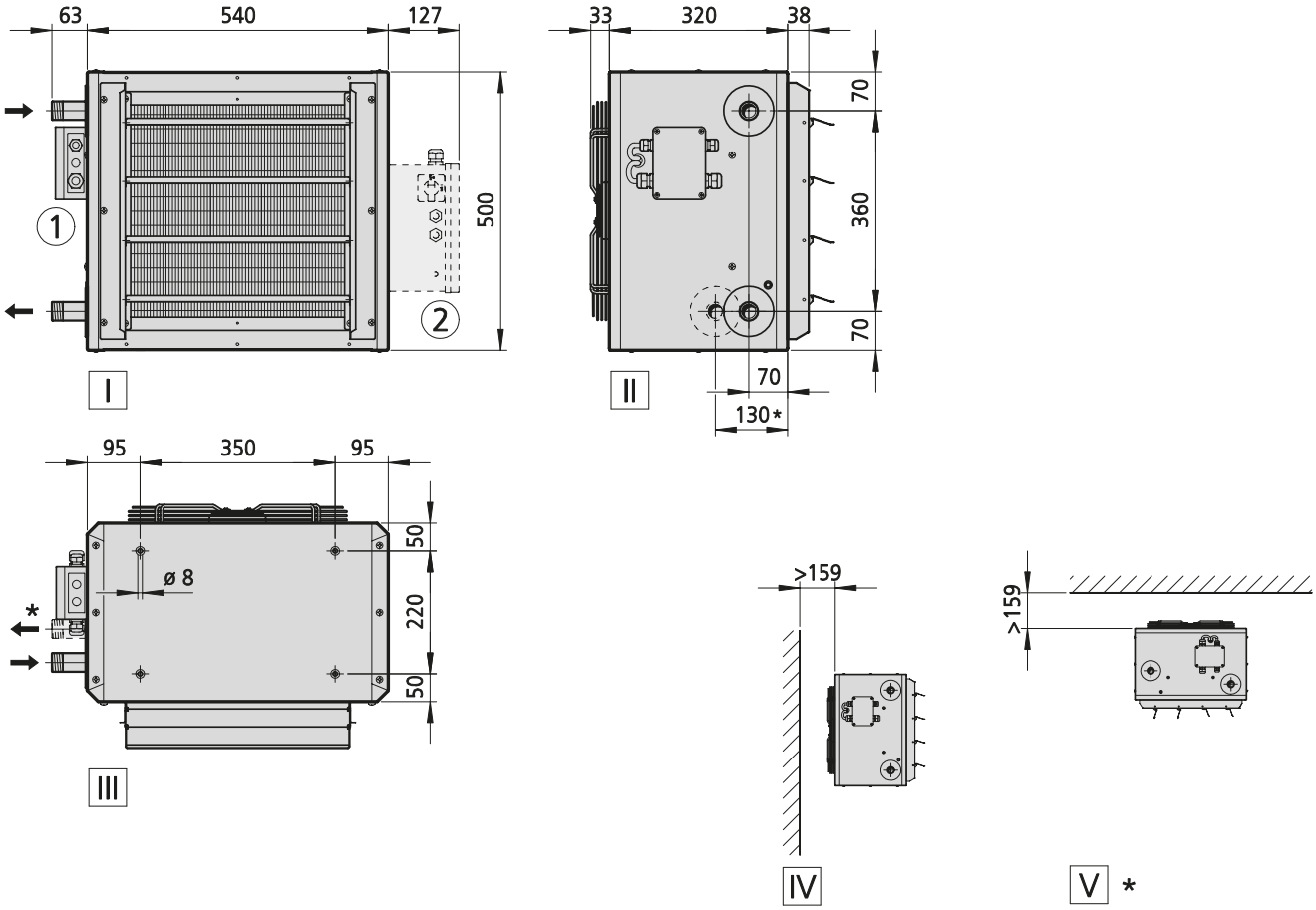

View
- I Front view
- II Side view, 1-layer heat exchanger (* = 2-layer)
- III Top view, 1-layer heat exchanger (* = 2-layer)
- IV Wall-mounted, 1-layer heat exchanger
- V Ceiling-mounted, 2-layer heat exchanger

More information
- 1 Electrical connection for EC model, electromechanical
- 2 Electrical connection for EC model with KaControl (optional)

Specifications

Type	Weight [kg]	Water content [l]	Connection
442156	40	1.6	1″
443156	51	2.1	1″
444156	60	2.6	1″

Performance data

Type	Inlet air temperature	Control voltage	Heat output[1]	Outlet air temperature	Air flow	Nominal fan speed	Power consumption	Amperage	Throw (wall-mounted)	Maximum installation height when ceiling-mounted					Sound pressure level[2]	Sound power level
										Louvre	Air diffuser	Outlet nozzle	Induction louvre	KaMAX, vertical slat position		
	[°C]	[V]	[kW]	[°C]	[m³/h]	[1/min]	[W]	[A]	[m]	[m]	[m]	[m]	[m]	[m]	[dB(A)]	[dB(A)]
442156	20	10	11.0	35.0	2200	1410	124	1.2	17.0	5.3	3.5	7.5	7.5	8.5	56	72
		8	9.6	36.6	1740	1150	64	0.7	14.0	4.6	3.0	6.4	6.4	7.3	51	67
		6	8.3	39.0	1310	905	32	0.4	10.0	3.8	2.6	5.3	5.3	6.0	44	60
		4	6.9	43.2	890	665	14	0.2	7.0	3.0	---	4.1	4.1	4.5	36	52
		2	5.7	44.4	560	480	7	0.1	4.0	---	---	3.0	3.0	3.3	27	43
443156	20	10	12.8	37.6	2200	1410	124	1.2	17.0	5.3	3.5	7.5	7.5	8.5	55	71
		8	11.1	39.1	1740	1150	64	0.7	14.0	4.6	3.0	6.4	6.4	7.3	50	66
		6	9.3	41.4	1310	905	32	0.4	10.0	3.8	2.6	5.3	5.3	6.0	43	59
		4	7.6	45.6	890	665	14	0.2	7.0	3.0	---	4.1	4.1	4.5	35	51
		2	6.1	46.8	560	480	7	0.1	4.0	---	---	3.0	3.0	3.3	26	42
444156	20	10	15.1	45.2	1800	1410	124	1.2	14.0	4.7	3.1	6.5	6.5	7.4	53	69
		8	12.4	46.2	1430	1150	64	0.7	11.0	4.0	2.7	5.6	5.6	6.3	48	64
		6	9.9	47.7	1080	905	32	0.4	8.0	3.4	2.3	4.6	4.6	5.2	41	57
		4	7.4	50.2	740	665	14	0.2	6.0	2.7	---	3.6	3.6	4.0	33	49
		2	5.4	50.9	480	480	7	0.1	4.0	---	---	2.7	2.7	3.0	24	40

Use our calculation tools on our website to easily calculate heat outputs and other technical data with just a few clicks!
▸ https://www.kampmann.co.uk/hvac/products/unit-heaters/top#Calculate-performance-data

[1] at LPHW 75/65 °C, t_{L1} = 20 °C
[2] The sound pressure levels were calculated with an assumed room insulation of 16 dB(A). This corresponds to a distance of 5 m, a room volume of 3000 m³ and a reverberation time of 2.0 s (in accordance with VDI 2081).

TOP

Heat exchanger steel, galvanised cross-counterflow
Model size 4
EC fan, 230 V, high speed

Technical drawing (Dimensions in mm)

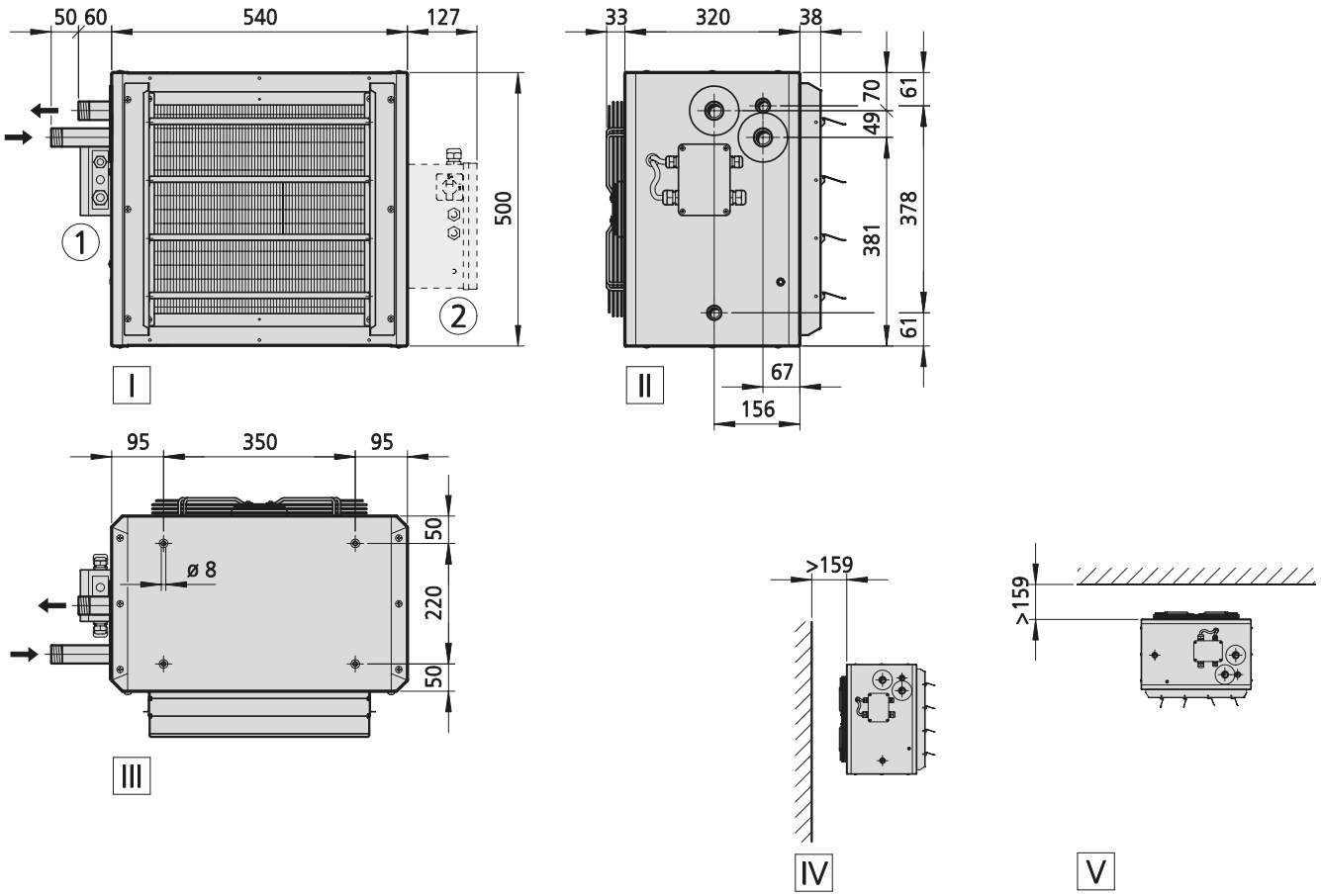

View
- I Front view
- II Side view
- III Top view
- IV Wall-mounted
- V Ceiling-mounted

More information
- 1 Electrical connection for EC model, electromechanical
- 2 Electrical connection for EC model with KaControl (optional)

Specifications

Type	Weight [kg]	Water content [l]	Connection
443358	52	6.1	1″
444358	61	6.1	1″

Performance data

Type	Inlet air temperature	Control voltage	Heat output[1]	Outlet air temperature	Air flow	Nominal fan speed	Power consumption	Amperage	Throw (wall-mounted)	Maximum installation height when ceiling-mounted					Sound pressure level[2]	Sound power level
										Louvre	Air diffuser	Outlet nozzle	Induction louvre	KaMAX, vertical slat position		
	[°C]	[V]	[kW]	[°C]	[m³/h]	[1/min]	[W]	[A]	[m]	[m]	[m]	[m]	[m]	[m]	[dB(A)]	[dB(A)]
443358	20	10	11.9	33.0	2770	1520	165	1.5	22.0	6.1	4.0	8.8	8.8	10.0	57	73
		8	10.6	34.1	2280	1290	99	1.0	18.0	5.4	3.5	7.7	7.7	8.8	52	68
		6	8.6	35.6	1660	1000	46	0.5	13.0	4.4	2.9	6.2	6.2	7.0	46	62
		4	6.4	37.5	1100	735	22	0.3	8.0	3.4	2.3	4.7	4.7	5.3	38	54
		2	4.4	38.6	650	525	12	0.2	5.0	2.4	---	3.3	3.3	3.7	29	45
444358	20	10	13.4	37.9	2260	1520	165	1.5	18.0	5.4	3.5	7.6	7.6	8.7	55	71
		8	12.0	39.3	1860	1290	99	1.0	14.0	4.8	3.2	6.7	6.7	7.6	50	66
		6	9.7	41.4	1370	1000	46	0.5	11.0	3.9	2.6	5.4	5.4	6.1	44	60
		4	7.3	44.0	910	735	22	0.3	7.0	3.0	---	4.1	4.1	4.6	36	52
		2	5.0	45.4	550	525	12	0.2	4.0	---	---	2.9	2.9	3.3	27	43

Use our calculation tools on our website to easily calculate heat outputs and other technical data with just a few clicks!
▸ https://www.kampmann.co.uk/hvac/products/unit-heaters/top#Calculate-performance-data

[1] at LPHW 80/40 °C, t_{L1} = 20 °C
[2] The sound pressure levels were calculated with an assumed room insulation of 16 dB(A). This corresponds to a distance of 5 m, a room volume of 3000 m³ and a reverberation time of 2.0 s (in accordance with VDI 2081).

TOP

Heat exchanger steel, galvanised cross-counterflow
Model size 4
EC fan, 230 V, reduced speed

Technical drawing (Dimensions in mm)

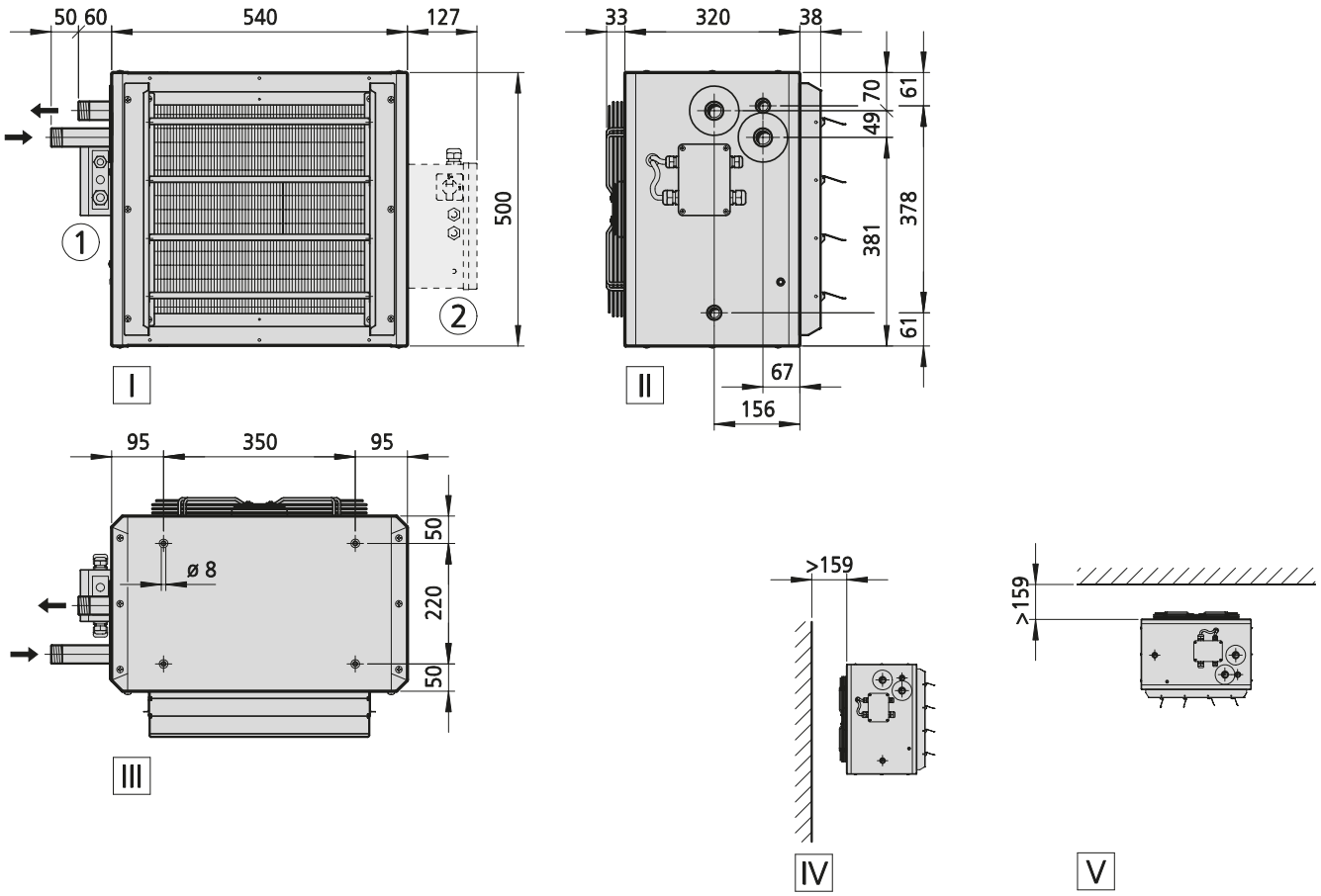

View
- I Front view
- II Side view
- III Top view
- IV Wall-mounted
- V Ceiling-mounted

More information
- 1 Electrical connection for EC model, electromechanical
- 2 Electrical connection for EC model with KaControl (optional)

Specifications

Type	Weight [kg]	Water content [l]	Connection
443356	51	6.1	1″
444356	61	6.1	1″

Performance data

Type	Inlet air temperature	Control voltage	Heat output[1]	Outlet air temperature	Air flow	Nominal fan speed	Power consumption	Amperage	Throw (wall-mounted)	Maximum installation height when ceiling-mounted					Sound pressure level[2]	Sound power level
										Louvre	Air diffuser	Outlet nozzle	Induction louvre	KaMAX, vertical slat position		
	[°C]	[V]	[kW]	[°C]	[m³/h]	[1/min]	[W]	[A]	[m]	[m]	[m]	[m]	[m]	[m]	[dB(A)]	[dB(A)]
443356	20	10	10.4	34.2	2200	1410	124	1.2	17.0	5.3	3.5	7.5	7.5	8.5	55	71
		8	8.9	35.4	1740	1150	64	0.7	14.0	4.6	3.0	6.4	6.4	7.3	50	66
		6	7.3	36.7	1310	905	32	0.4	10.0	3.8	2.6	5.3	5.3	6.0	43	59
		4	5.5	38.5	890	665	14	0.2	7.0	3.0	---	4.1	4.1	4.5	35	51
		2	3.9	39.4	560	480	7	0.1	4.0	---	---	3.0	3.0	3.3	26	42
444356	20	10	11.7	39.6	1800	1410	124	1.2	14.0	4.7	3.1	6.5	6.5	7.4	53	69
		8	10.0	41.1	1430	1150	64	0.7	11.0	4.0	2.7	5.6	5.6	6.3	48	64
		6	8.2	42.9	1080	905	32	0.4	8.0	3.4	2.3	4.6	4.6	5.2	41	57
		4	6.2	45.4	740	665	14	0.2	6.0	2.7	---	3.6	3.6	4.0	33	49
		2	4.6	46.5	480	480	7	0.1	4.0	---	---	2.7	2.7	3.0	24	40

Use our calculation tools on our website to easily calculate heat outputs and other technical data with just a few clicks!
▸ https://www.kampmann.co.uk/hvac/products/unit-heaters/top#Calculate-performance-data

[1] at LPHW 80/40 °C, t_{L1} = 20 °C
[2] The sound pressure levels were calculated with an assumed room insulation of 16 dB(A). This corresponds to a distance of 5 m, a room volume of 3000 m³ and a reverberation time of 2.0 s (in accordance with VDI 2081).

TOP

Heat exchanger copper/aluminium
Model size 5
EC fan, 230 V, high speed

Technical drawing (Dimensions in mm)

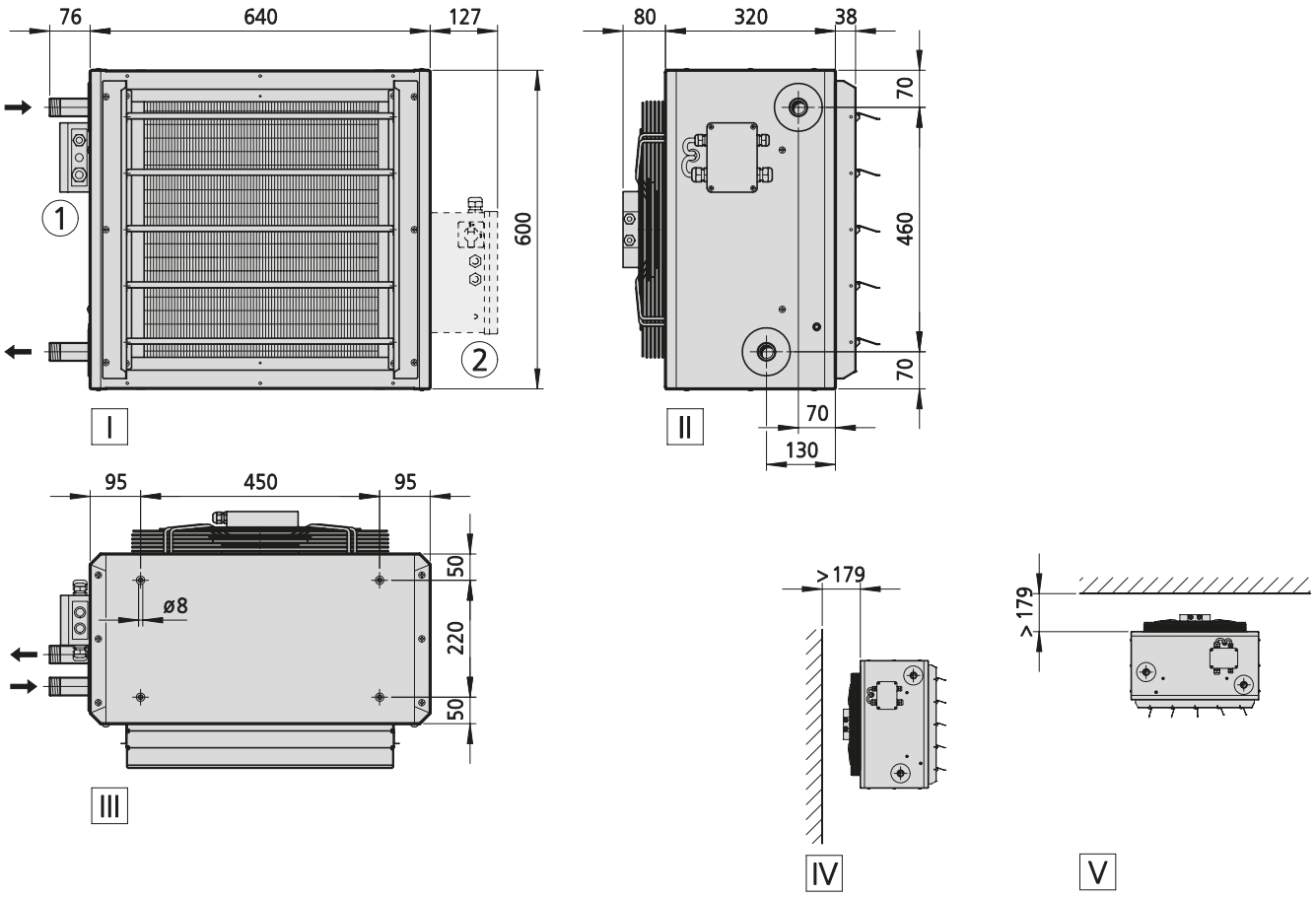

View
I Front view
II Side view
III Top view
IV Wall-mounted
V Ceiling-mounted

More information
① Electrical connection for EC model, electromechanical
② Electrical connection for EC model with KaControl (optional)

Specifications

Type	Weight [kg]	Water content [l]	Connection
452058	32	2.2	1″
453058	32	3.0	1″
454058	34	3.8	1″

Performance data

Type	Inlet air temperature	Control voltage	Heat output[1]	Outlet air temperature	Air flow	Nominal fan speed	Power consumption	Amperage	Throw (wall-mounted)	Maximum installation height when ceiling-mounted					Sound pressure level[2]	Sound power level
										Louvre	Air diffuser	Outlet nozzle	Induction louvre	KaMAX, vertical slat position		
	[°C]	[V]	[kW]	[°C]	[m³/h]	[1/min]	[W]	[A]	[m]	[m]	[m]	[m]	[m]	[m]	[dB(A)]	[dB(A)]
452058	20	10	23.9	34.8	4860	1470	400	1.8	26.0	7.2	4.6	10.6	10.6	13.0	65	81
		8	20.4	36.0	3840	1180	208	0.9	21.0	6.2	4.1	9.1	9.1	11.0	59	75
		6	16.2	37.9	2740	865	88	0.4	15.0	5.1	3.4	7.3	7.3	8.8	50	66
		4	11.8	41.8	1630	550	20	0.2	8.0	3.7	2.5	5.2	5.2	6.2	40	56
		2	7.1	43.4	520	235	10	0.1	2.0	---	---	2.4	2.4	2.8	18	34
453058	20	10	28.7	39.2	4500	1470	400	1.8	24.0	6.9	4.4	10.1	10.1	12.3	63	79
		8	24.1	40.5	3540	1180	208	0.9	19.0	5.9	3.9	8.6	8.6	10.4	57	73
		6	18.7	42.5	2500	865	88	0.4	13.0	4.8	3.2	6.8	6.8	8.2	48	64
		4	13.0	46.8	1460	550	20	0.2	7.0	3.5	2.4	4.8	4.8	5.7	38	54
		2	6.8	48.5	420	235	10	0.1	2.0	---	---	---	---	2.4	16	32
454058	20	10	37.0	48.9	3860	1470	400	1.8	21.0	6.3	4.1	9.1	9.1	11.1	61	77
		8	29.9	49.9	3010	1180	208	0.9	16.0	5.4	3.5	7.7	7.7	9.4	55	71
		6	21.8	51.4	2100	865	88	0.4	11.0	4.3	2.9	6.1	6.1	7.3	46	62
		4	13.4	54.2	1180	550	20	0.2	6.0	3.0	---	4.2	4.2	4.9	36	52
		2	4.5	55.5	260	235	10	0.1	1.0	---	---	---	---	---	14	30

Use our calculation tools on our website to easily calculate heat outputs and other technical data with just a few clicks!
▸ https://www.kampmann.co.uk/hvac/products/unit-heaters/top#Calculate-performance-data

[1] at LPHW 75/65 °C, t_{L1} = 20 °C
[2] The sound pressure levels were calculated with an assumed room insulation of 16 dB(A). This corresponds to a distance of 5 m, a room volume of 3000 m³ and a reverberation time of 2.0 s (in accordance with VDI 2081).

TOP

Heat exchanger copper/aluminium
Model size 5
EC fan, 230 V, reduced speed

Technical drawing (Dimensions in mm)

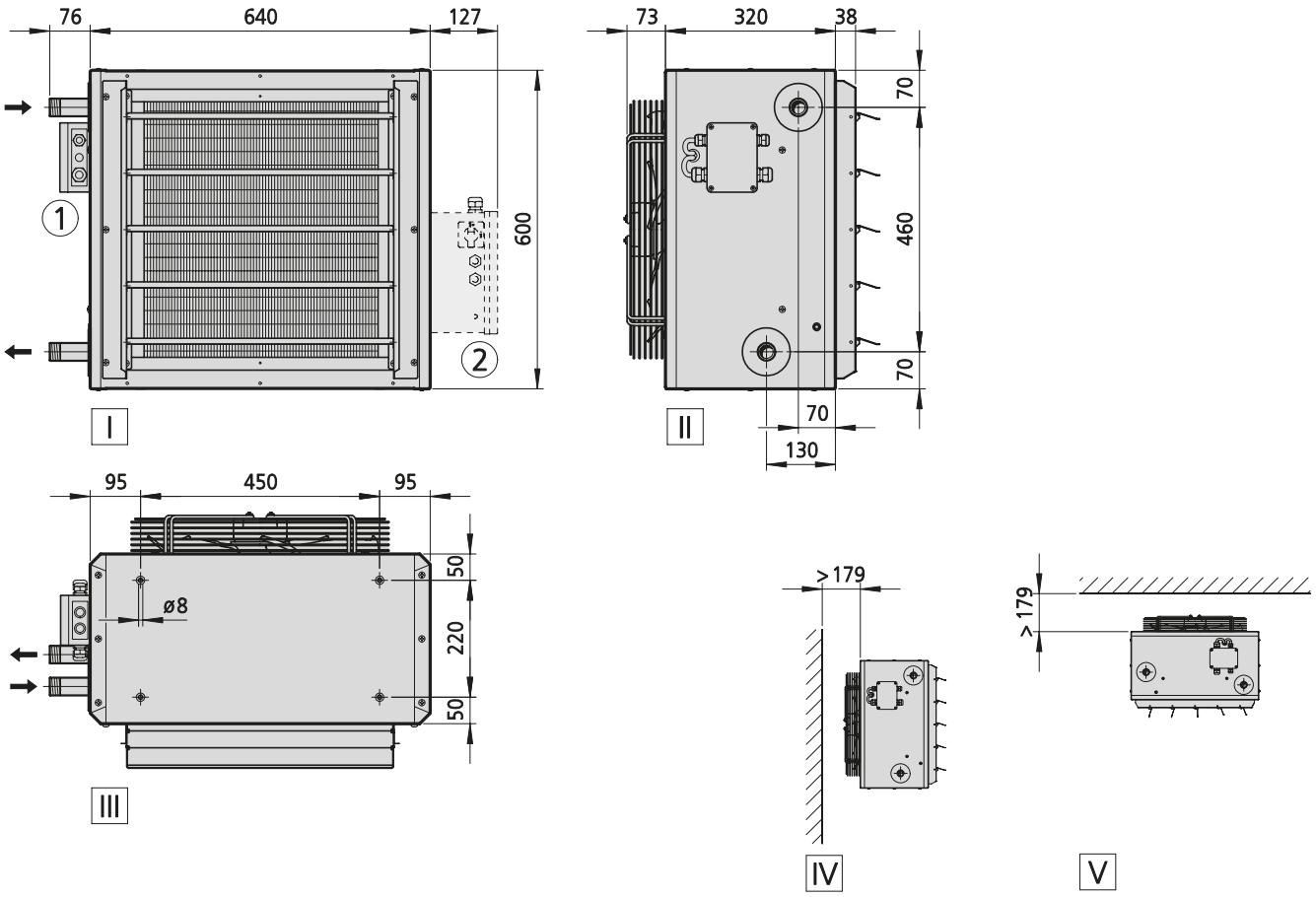

View
I Front view
II Side view
III Top view
IV Wall-mounted
V Ceiling-mounted

More information
① Electrical connection for EC model, electromechanical
② Electrical connection for EC model with KaControl (optional)

Specifications

Type	Weight [kg]	Water content [l]	Connection
452056	30	2.2	1″
453056	30	3.0	1″
454056	32	3.8	1″

Performance data

Type	Inlet air temperature	Control voltage	Heat output[1]	Outlet air temperature	Air flow	Nominal fan speed	Power consumption	Amperage	Throw (wall-mounted)	Maximum installation height when ceiling-mounted					Sound pressure level[2]	Sound power level
										Louvre	Air diffuser	Outlet nozzle	Induction louvre	KaMAX, vertical slat position		
	[°C]	[V]	[kW]	[°C]	[m³/h]	[1/min]	[W]	[A]	[m]	[m]	[m]	[m]	[m]	[m]	[dB(A)]	[dB(A)]
452056	20	10	18.6	36.6	3370	1080	162	1.5	18.0	5.8	3.8	8.3	8.3	10.1	56	72
		8	16.5	37.7	2810	925	93	1.0	15.0	5.2	3.4	7.4	7.4	8.9	52	68
		6	13.5	39.8	2060	720	46	0.5	11.0	4.3	2.9	6.0	6.0	7.2	45	61
		4	10.7	43.6	1360	530	22	0.3	7.0	3.3	2.3	4.6	4.6	5.4	36	52
		2	8.3	44.9	810	380	11	0.2	4.0	2.4	---	3.3	3.3	3.8	27	43
453056	20	10	21.6	41.3	3060	1080	162	1.5	16.0	5.4	3.6	7.8	7.8	9.5	54	70
		8	18.9	42.5	2530	925	93	1.0	13.0	4.8	3.2	6.9	6.9	8.3	50	66
		6	15.1	44.8	1830	720	46	0.5	10.0	4.0	2.7	5.6	5.6	6.7	43	59
		4	11.4	48.9	1190	530	22	0.3	6.0	3.0	---	4.2	4.2	5.0	34	50
		2	8.4	50.3	680	380	11	0.2	3.0	---	---	2.9	2.9	3.4	25	41
454056	20	10	26.0	50.6	2560	1080	162	1.5	14.0	4.9	3.2	6.9	6.9	8.4	52	68
		8	21.8	51.4	2100	925	93	1.0	11.0	4.3	2.9	6.1	6.1	7.3	48	64
		6	16.3	52.9	1490	720	46	0.5	8.0	3.5	2.4	4.9	4.9	5.8	41	57
		4	10.9	55.7	920	530	22	0.3	4.0	2.6	---	3.5	3.5	4.2	32	48
		2	6.6	56.6	480	380	11	0.2	2.0	---	---	2.3	2.3	2.7	23	39

Use our calculation tools on our website to easily calculate heat outputs and other technical data with just a few clicks!
▸ https://www.kampmann.co.uk/hvac/products/unit-heaters/top#Calculate-performance-data

[1] at LPHW 75/65 °C, t_{L1} = 20 °C
[2] The sound pressure levels were calculated with an assumed room insulation of 16 dB(A). This corresponds to a distance of 5 m, a room volume of 3000 m³ and a reverberation time of 2.0 s (in accordance with VDI 2081).

TOP

Heat exchanger steel, galvanised
Model size 5
EC fan, 230 V, high speed

Technical drawing (Dimensions in mm)

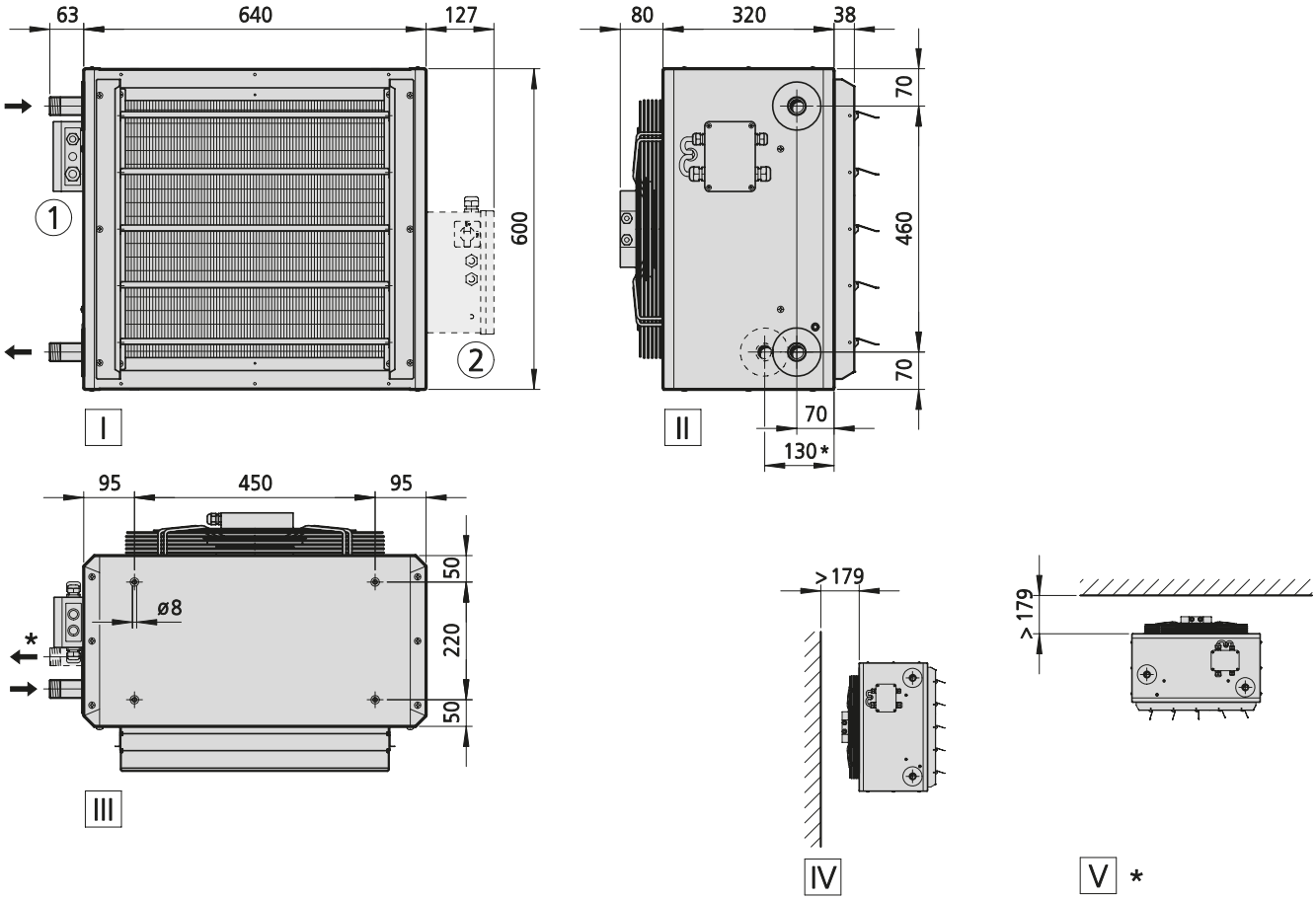

View
- I Front view
- II Side view, 1-layer heat exchanger (* = 2-layer)
- III Top view, 1-layer heat exchanger (* = 2-layer)
- IV Wall-mounted, 1-layer heat exchanger
- V Ceiling-mounted, 2-layer heat exchanger

More information
- ① Electrical connection for EC model, electromechanical
- ② Electrical connection for EC model with KaControl (optional)

Specifications

Type	Weight [kg]	Water content [l]	Connection
452158	58	2.2	1″
453158	73	3.0	1″
454158	88	3.8	1″

Performance data

Type	Inlet air temperature	Control voltage	Heat output[1]	Outlet air temperature	Air flow	Nominal fan speed	Power consumption	Amperage	Throw (wall-mounted)	Maximum installation height when ceiling-mounted					Sound pressure level[2]	Sound power level
										Louvre	Air diffuser	Outlet nozzle	Induction louvre	KaMAX, vertical slat position		
	[°C]	[V]	[kW]	[°C]	[m³/h]	[1/min]	[W]	[A]	[m]	[m]	[m]	[m]	[m]	[m]	[dB(A)]	[dB(A)]
452158	20	10	22.6	34.2	4800	1470	400	1.8	26.0	7.2	4.6	10.5	10.5	12.9	66	82
		8	19.5	35.2	3850	1180	208	0.9	21.0	6.3	4.1	9.1	9.1	11.1	60	76
		6	15.8	36.9	2820	865	88	0.4	15.0	5.2	3.4	7.4	7.4	8.9	51	67
		4	11.9	40.1	1790	550	20	0.2	9.0	3.9	2.7	5.5	5.5	6.6	41	57
		2	7.8	41.5	760	235	10	0.1	4.0	2.3	---	3.1	3.1	3.7	19	35
453158	20	10	27.3	37.2	4800	1470	400	1.8	26.0	7.2	4.6	10.5	10.5	12.9	65	81
		8	23.2	38.2	3850	1180	208	0.9	21.0	6.3	4.1	9.1	9.1	11.1	59	75
		6	18.4	39.7	2820	865	88	0.4	15.0	5.2	3.4	7.4	7.4	8.9	50	66
		4	13.3	42.4	1790	550	20	0.2	9.0	3.9	2.7	5.5	5.5	6.6	40	56
		2	7.8	43.7	760	235	10	0.1	4.0	2.3	---	3.1	3.1	3.7	18	34
454158	20	10	33.6	45.9	3900	1470	400	1.8	21.0	6.3	4.1	9.1	9.1	11.2	63	79
		8	27.9	46.8	3140	1180	208	0.9	17.0	5.5	3.6	7.9	7.9	9.6	57	73
		6	21.4	48.0	2300	865	88	0.4	12.0	4.6	3.1	6.5	6.5	7.8	48	64
		4	14.6	49.8	1470	550	20	0.2	8.0	3.5	2.4	4.8	4.8	5.7	38	54
		2	7.4	50.9	640	235	10	0.1	3.0	---	---	2.8	2.8	3.3	16	32

Use our calculation tools on our website to easily calculate heat outputs and other technical data with just a few clicks!
▸ https://www.kampmann.co.uk/hvac/products/unit-heaters/top#Calculate-performance-data

[1] at LPHW 75/65 °C, t_{L1} = 20 °C
[2] The sound pressure levels were calculated with an assumed room insulation of 16 dB(A). This corresponds to a distance of 5 m, a room volume of 3000 m³ and a reverberation time of 2.0 s (in accordance with VDI 2081).

TOP

Heat exchanger steel, galvanised
Model size 5
EC fan, 230 V, reduced speed

Technical drawing (Dimensions in mm)

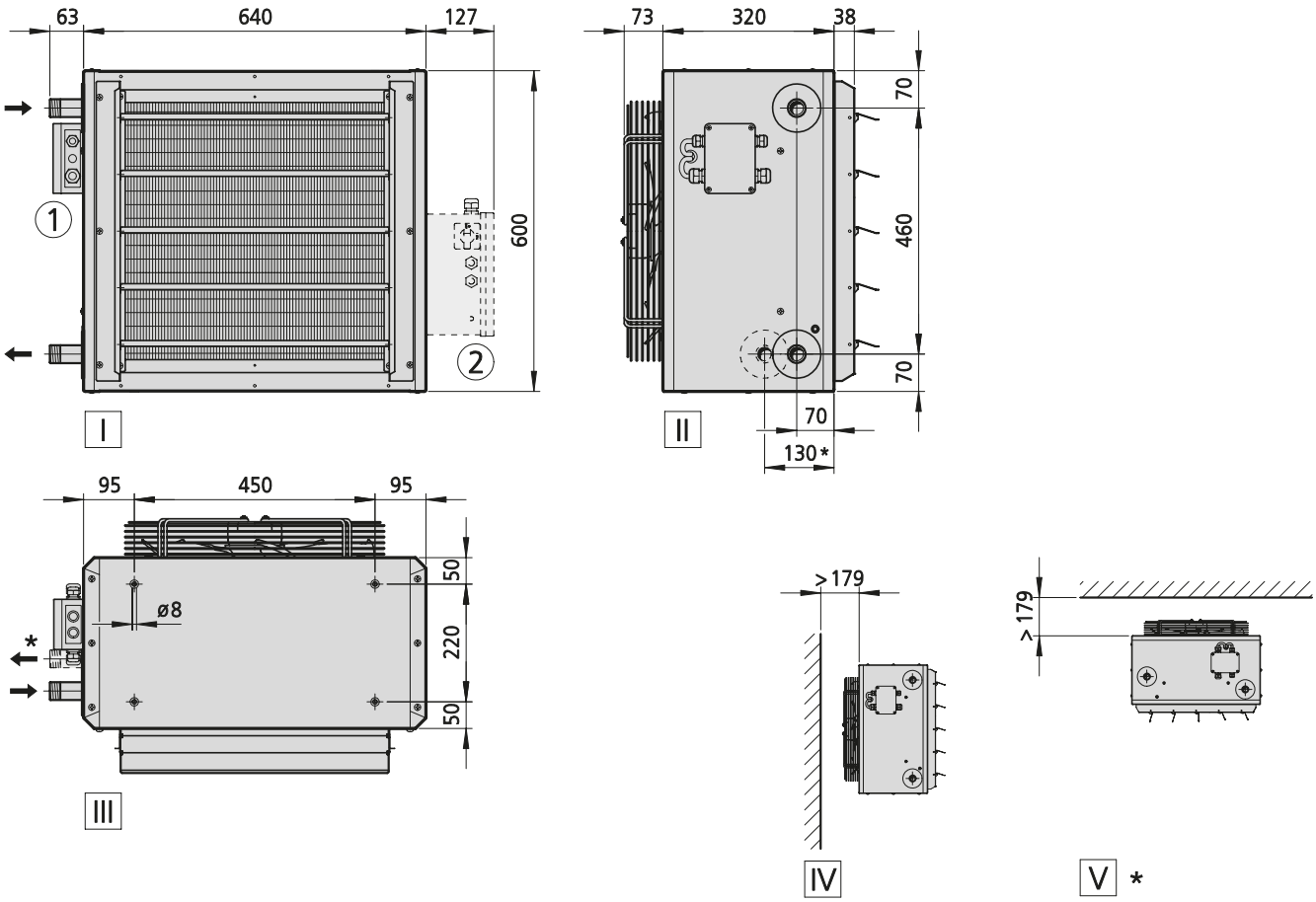

View
I Front view
II Side view, 1-layer heat exchanger (* = 2-layer)
III Top view, 1-layer heat exchanger (* = 2-layer)
IV Wall-mounted, 1-layer heat exchanger
V Ceiling-mounted, 2-layer heat exchanger

More information
1 Electrical connection for EC model, electromechanical
2 Electrical connection for EC model with KaControl (optional)

Specifications

Type	Weight [kg]	Water content [l]	Connection
452156	56	2.2	1″
453156	71	3.0	1″
454156	86	3.8	1″

Performance data

Type	Inlet air temperature	Control voltage	Heat output[1]	Outlet air temperature	Air flow	Nominal fan speed	Power consumption	Amperage	Throw (wall-mounted)	Maximum installation height when ceiling-mounted					Sound pressure level[2]	Sound power level
										Louvre	Air diffuser	Outlet nozzle	Induction louvre	KaMAX, vertical slat position		
	[°C]	[V]	[kW]	[°C]	[m³/h]	[1/min]	[W]	[A]	[m]	[m]	[m]	[m]	[m]	[m]	[dB(A)]	[dB(A)]
452156	20	10	18.0	35.8	3420	1080	162	1.5	18.0	5.8	3.8	8.4	8.4	10.2	57	73
		8	16.1	36.7	2900	925	93	1.0	16.0	5.3	3.5	7.5	7.5	9.1	53	69
		6	13.6	38.4	2220	720	46	0.5	12.0	4.5	3.0	6.3	6.3	7.6	46	62
		4	11.1	41.1	1590	530	22	0.3	8.0	3.6	2.5	5.1	5.1	6.1	37	53
		2	9.1	42.2	1080	380	11	0.2	5.0	2.9	---	3.9	3.9	4.7	28	44
453156	20	10	21.2	38.7	3420	1080	162	1.5	18.0	5.8	3.8	8.4	8.4	10.2	56	72
		8	18.8	39.5	2900	925	93	1.0	16.0	5.3	3.5	7.5	7.5	9.1	52	68
		6	15.5	41.0	2220	720	46	0.5	12.0	4.5	3.0	6.3	6.3	7.6	45	61
		4	12.2	43.2	1590	530	22	0.3	8.0	3.6	2.5	5.1	5.1	6.1	36	52
		2	9.6	44.2	1080	380	11	0.2	5.0	2.9	---	3.9	3.9	4.7	27	43
454156	20	10	24.8	47.3	2740	1080	162	1.5	15.0	5.1	3.4	7.3	7.3	8.8	54	70
		8	21.5	47.9	2320	925	93	1.0	12.0	4.6	3.1	6.5	6.5	7.8	50	66
		6	17.0	49.0	1770	720	46	0.5	9.0	3.9	2.6	5.4	5.4	6.5	43	59
		4	12.7	50.6	1260	530	22	0.3	6.0	3.2	---	4.4	4.4	5.2	34	50
		2	9.3	51.3	850	380	11	0.2	4.0	2.5	---	3.4	3.4	4.0	25	41

Use our calculation tools on our website to easily calculate heat outputs and other technical data with just a few clicks!
▸ https://www.kampmann.co.uk/hvac/products/unit-heaters/top#Calculate-performance-data

[1] at LPHW 75/65 °C, t_{L1} = 20 °C
[2] The sound pressure levels were calculated with an assumed room insulation of 16 dB(A). This corresponds to a distance of 5 m, a room volume of 3000 m³ and a reverberation time of 2.0 s (in accordance with VDI 2081).

TOP

Heat exchanger steel, galvanised cross-counterflow
Model size 5
EC fan, 230 V, high speed

Technical drawing (Dimensions in mm)

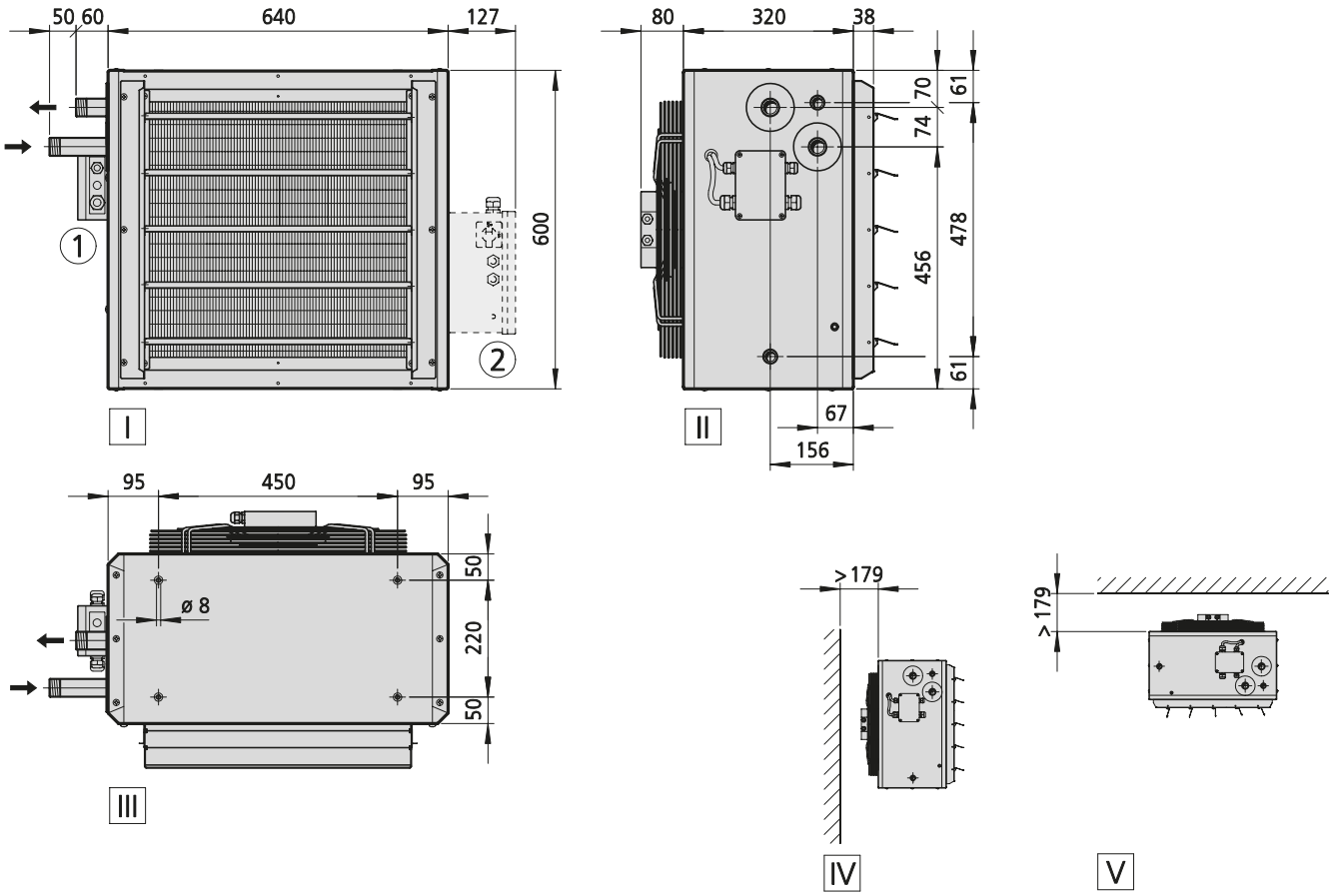

View
- I Front view
- II Side view
- III Top view
- IV Wall-mounted
- V Ceiling-mounted

More information
- ① Electrical connection for EC model, electromechanical
- ② Electrical connection for EC model with KaControl (optional)

Specifications

Type	Weight [kg]	Water content [l]	Connection
453358	73	8.2	1″
454358	88	8.2	1″

Performance data

Type	Inlet air temperature	Control voltage	Heat output[1]	Outlet air temperature	Air flow	Nominal fan speed	Power consumption	Amperage	Throw (wall-mounted)	Maximum installation height when ceiling-mounted					Sound pressure level[2]	Sound power level
										Louvre	Air diffuser	Outlet nozzle	Induction louvre	KaMAX, vertical slat position		
	[°C]	[V]	[kW]	[°C]	[m³/h]	[1/min]	[W]	[A]	[m]	[m]	[m]	[m]	[m]	[m]	[dB(A)]	[dB(A)]
453358	20	10	20.5	32.9	4800	1470	400	1.8	26.0	8.7	5.5	12.7	12.7	14.7	65	81
		8	18.3	34.3	3850	1180	208	0.9	21.0	7.6	4.8	11.0	11.0	12.6	59	75
		6	15.0	36.0	2820	865	88	0.4	15.0	6.2	4.0	8.9	8.9	10.2	50	66
		4	10.9	38.3	1790	550	20	0.2	9.0	4.7	3.1	6.5	6.5	7.4	40	56
		2	5.9	39.9	760	235	10	0.1	4.0	2.7	---	3.6	3.6	4.1	18	34
454358	20	10	21.7	36.8	3900	1470	400	1.8	21.0	7.6	4.8	11.1	11.1	12.7	63	79
		8	19.4	38.6	3140	1180	208	0.9	17.0	6.6	4.3	9.5	9.5	11.0	57	73
		6	15.9	40.8	2300	865	88	0.4	12.0	5.5	3.6	7.7	7.7	8.8	48	64
		4	11.6	43.7	1470	550	20	0.2	8.0	4.1	2.7	5.7	5.7	6.5	38	54
		2	6.3	45.8	640	235	10	0.1	3.0	2.4	---	3.2	3.2	3.6	16	32

Use our calculation tools on our website to easily calculate heat outputs and other technical data with just a few clicks!
▸ https://www.kampmann.co.uk/hvac/products/unit-heaters/top#Calculate-performance-data

[1] at LPHW 80/40 °C, t_{L1} = 20 °C
[2] The sound pressure levels were calculated with an assumed room insulation of 16 dB(A). This corresponds to a distance of 5 m, a room volume of 3000 m³ and a reverberation time of 2.0 s (in accordance with VDI 2081).

TOP

Heat exchanger steel, galvanised cross-counterflow
Model size 5
EC fan, 230 V, reduced speed

Technical drawing (Dimensions in mm)

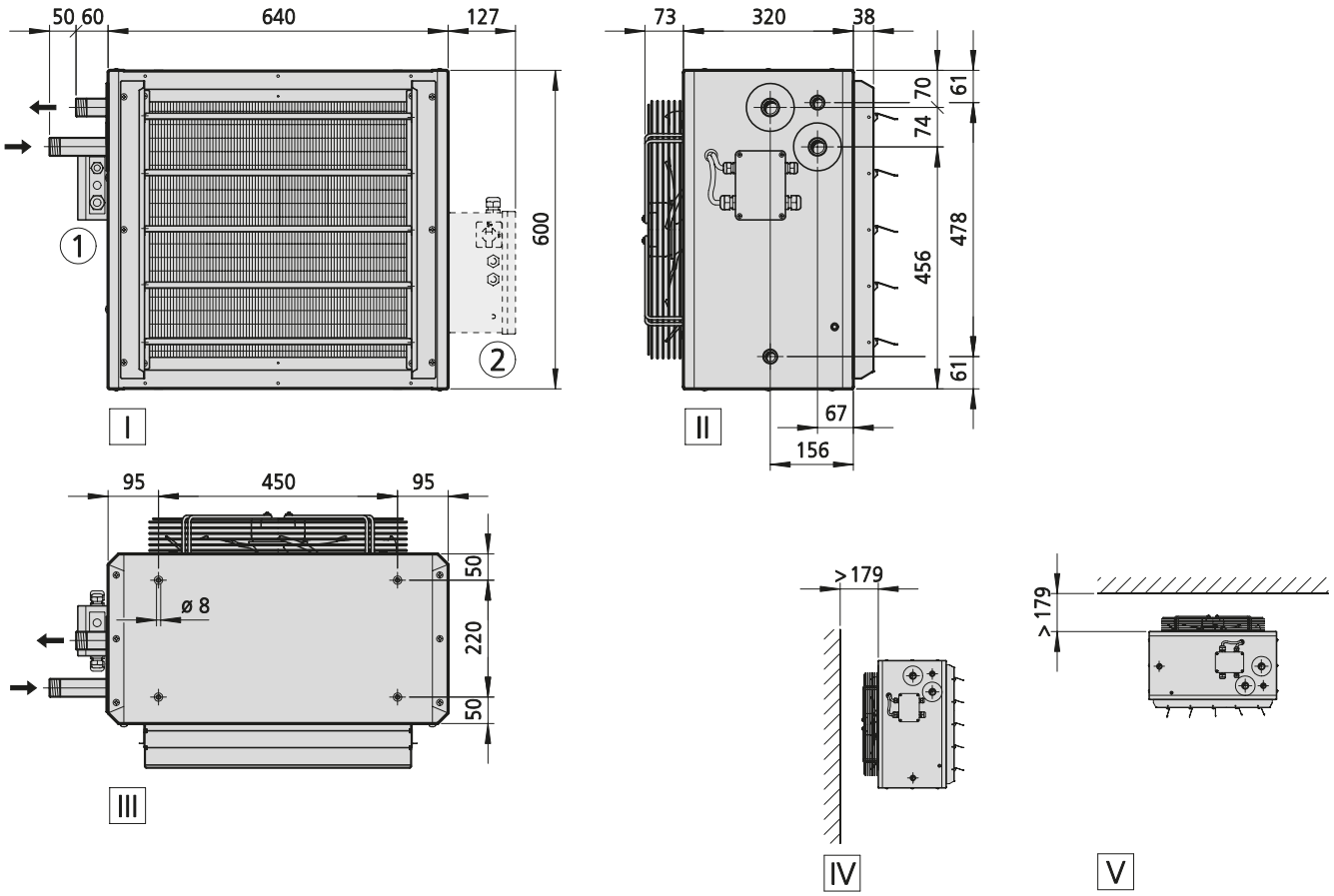

View
- I Front view
- II Side view
- III Top view
- IV Wall-mounted
- V Ceiling-mounted

More information
- ① Electrical connection for EC model, electromechanical
- ② Electrical connection for EC model with KaControl (optional)

Specifications

Type	Weight [kg]	Water content [l]	Connection
453356	71	8.2	1″
454356	86	8.2	1″

Performance data

Type	Inlet air temperature	Control voltage	Heat output[1]	Outlet air temperature	Air flow	Nominal fan speed	Power consumption	Amperage	Throw (wall-mounted)	Maximum installation height when ceiling-mounted					Sound pressure level[2]	Sound power level
										Louvre	Air diffuser	Outlet nozzle	Induction louvre	KaMAX, vertical slat position		
	[°C]	[V]	[kW]	[°C]	[m³/h]	[1/min]	[W]	[A]	[m]	[m]	[m]	[m]	[m]	[m]	[dB(A)]	[dB(A)]
453356	20	10	17.0	35.0	3420	1080	162	1.5	18.0	7.0	4.5	10.1	10.1	11.6	56	72
		8	15.3	35.9	2900	925	93	1.0	16.0	6.3	4.1	9.0	9.0	10.4	52	68
		6	12.7	37.2	2220	720	46	0.5	12.0	5.3	3.5	7.5	7.5	8.6	45	61
		4	9.9	38.9	1590	530	22	0.3	8.0	4.3	2.9	6.0	6.0	6.8	36	52
		2	7.5	39.8	1080	380	11	0.2	5.0	3.4	2.3	4.6	4.6	5.2	27	43
454356	20	10	17.8	39.6	2740	1080	162	1.5	15.0	6.1	3.9	8.7	8.7	10.0	54	70
		8	16.0	40.8	2320	925	93	1.0	12.0	5.5	3.6	7.8	7.8	8.9	50	66
		6	13.2	42.6	1770	720	46	0.5	9.0	4.6	3.1	6.5	6.5	7.3	43	59
		4	10.3	44.7	1260	530	22	0.3	6.0	3.7	2.5	5.1	5.1	5.8	34	50
		2	7.7	45.9	850	380	11	0.2	4.0	2.9	---	3.9	3.9	4.4	25	41

Use our calculation tools on our website to easily calculate heat outputs and other technical data with just a few clicks!
▸ https://www.kampmann.co.uk/hvac/products/unit-heaters/top#Calculate-performance-data

[1] at LPHW 80/40 °C, t_{L1} = 20 °C
[2] The sound pressure levels were calculated with an assumed room insulation of 16 dB(A). This corresponds to a distance of 5 m, a room volume of 3000 m³ and a reverberation time of 2.0 s (in accordance with VDI 2081).

TOP

Heat exchanger copper/aluminium
Model size 6
EC fan, 230 V, high speed

Technical drawing (Dimensions in mm)

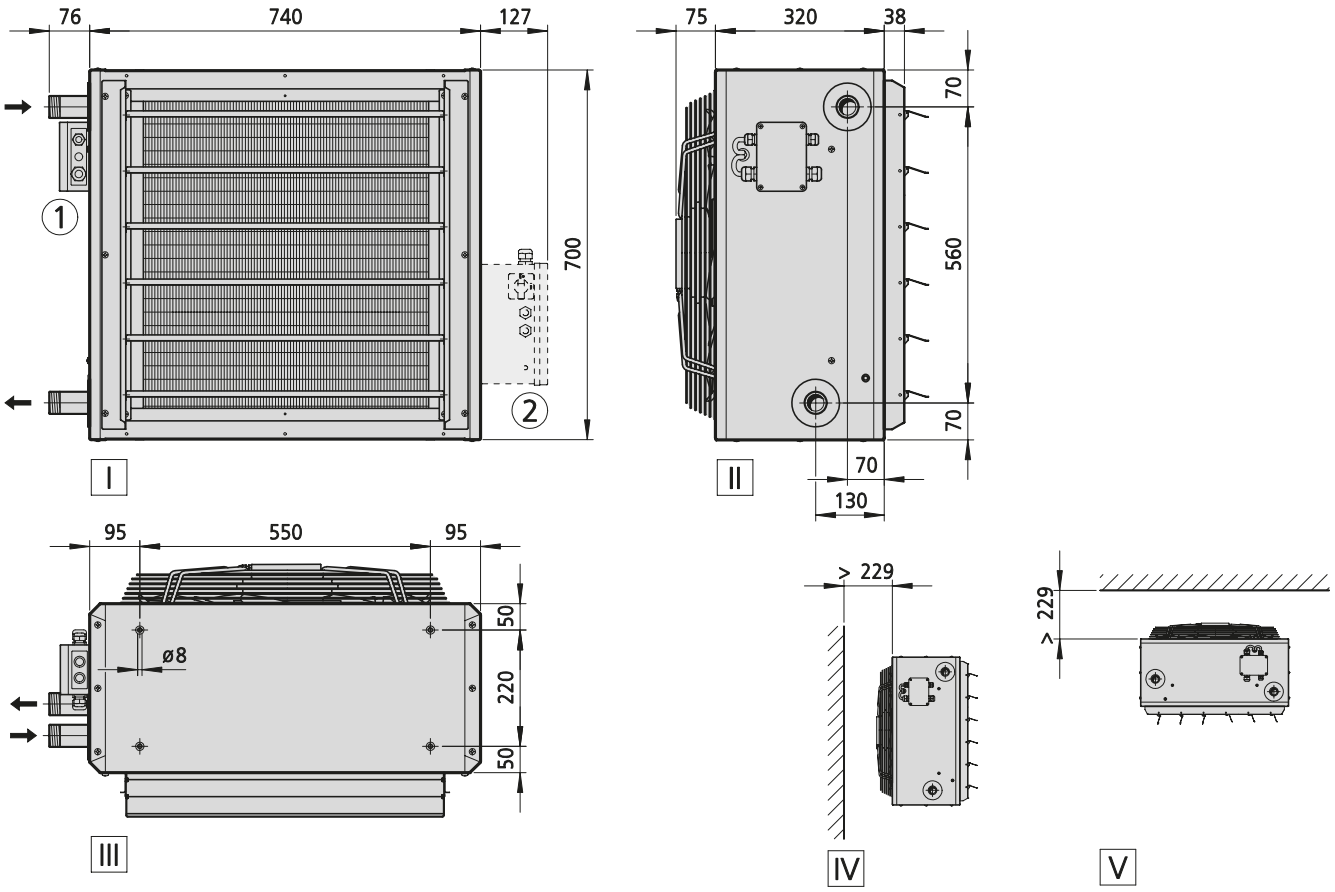

View
- I Front view
- II Side view
- III Top view
- IV Wall-mounted
- V Ceiling-mounted

More information
- ① Electrical connection for EC model, electromechanical
- ② Electrical connection for EC model with KaControl (optional)

Specifications

Type	Weight [kg]	Water content [l]	Connection
462058	44	3.4	1 1/4"
463058	46	4.5	1 1/4"
464058	49	5.6	1 1/4"

Performance data

Type	Inlet air temperature	Control voltage	Heat output[1]	Outlet air temperature	Air flow	Nominal fan speed	Power consumption	Amperage	Throw (wall-mounted)	Maximum installation height when ceiling-mounted					Sound pressure level[2]	Sound power level
										Louvre	Air diffuser	Outlet nozzle	Induction louvre	KaMAX, vertical slat position		
	[°C]	[V]	[kW]	[°C]	[m³/h]	[1/min]	[W]	[A]	[m]	[m]	[m]	[m]	[m]	[m]	[dB(A)]	[dB(A)]
462058	20	10	32.0	34.0	6900	990	420	1.8	32.0	8.0	4.7	11.7	11.7	14.7	64	80
		8	27.2	35.1	5440	790	218	1.0	25.0	7.0	4.2	10.0	10.0	12.5	58	74
		6	21.8	36.8	3910	580	89	0.4	18.0	5.7	3.5	8.1	8.1	10.0	50	66
		4	16.1	40.4	2380	370	28	0.2	11.0	4.2	2.7	5.9	5.9	7.2	39	55
		2	10.1	41.9	850	160	20	0.1	3.0	2.3	---	3.0	3.0	3.6	18	34
463058	20	10	40.5	41.3	5730	990	420	1.8	27.0	7.2	4.3	10.3	10.3	13.0	62	78
		8	33.7	42.7	4480	790	218	1.0	21.0	6.2	3.7	8.8	8.8	11.0	56	72
		6	26.0	44.8	3160	580	89	0.4	14.0	5.0	3.1	7.1	7.1	8.7	48	64
		4	17.8	49.0	1850	370	28	0.2	8.0	3.7	2.3	5.0	5.0	6.1	37	53
		2	9.0	50.8	530	160	20	0.1	2.0	---	---	---	---	2.6	16	32
464058	20	10	48.5	49.8	4900	990	420	1.8	23.0	6.5	3.9	9.4	9.4	11.7	60	76
		8	39.2	50.9	3830	790	218	1.0	17.0	5.6	3.4	8.0	8.0	9.9	54	70
		6	29.0	52.4	2690	580	89	0.4	12.0	4.6	2.8	6.4	6.4	7.8	46	62
		4	18.2	55.2	1560	370	28	0.2	7.0	3.3	---	4.5	4.5	5.4	35	51
		2	7.0	56.5	430	160	20	0.1	1.0	---	---	---	---	2.3	14	30

Use our calculation tools on our website to easily calculate heat outputs and other technical data with just a few clicks!
▸ https://www.kampmann.co.uk/hvac/products/unit-heaters/top#Calculate-performance-data

[1] at LPHW 75/65 °C, t_{L1} = 20 °C
[2] The sound pressure levels were calculated with an assumed room insulation of 16 dB(A). This corresponds to a distance of 5 m, a room volume of 3000 m³ and a reverberation time of 2.0 s (in accordance with VDI 2081).

TOP

Heat exchanger steel, galvanised
Model size 6
EC fan, 230 V, high speed

Technical drawing (Dimensions in mm)

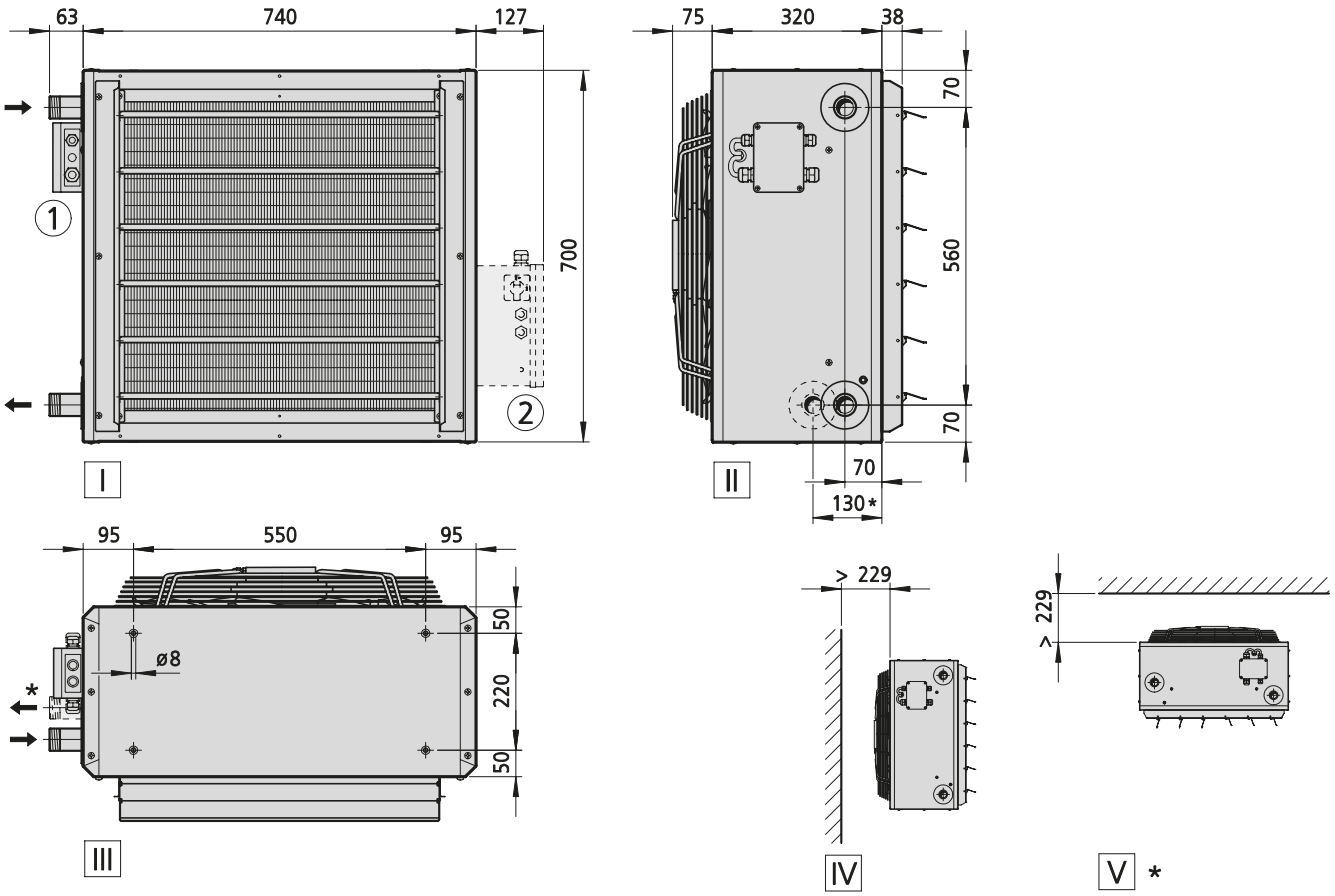

View

I Front view
II Side view, 1-layer heat exchanger (* = 2-layer)
III Top view, 1-layer heat exchanger (* = 2-layer)
IV Wall-mounted, 1-layer heat exchanger
V Ceiling-mounted, 2-layer heat exchanger

More information

① Electrical connection for EC model, electromechanical
② Electrical connection for EC model with KaControl (optional)

Specifications

Type	Weight [kg]	Water content [l]	Connection
462158	81	3.4	1 1/4”
463158	101	4.5	1 1/4”
464158	122	5.6	1 1/4”

Performance data

Type	Inlet air temperature	Control voltage	Heat output[1]	Outlet air temperature	Air flow	Nominal fan speed	Power consumption	Amperage	Throw (wall-mounted)	Maximum installation height when ceiling-mounted					Sound pressure level[2]	Sound power level
										Louvre	Air diffuser	Outlet nozzle	Induction louvre	KaMAX, vertical slat position		
	[°C]	[V]	[kW]	[°C]	[m³/h]	[1/min]	[W]	[A]	[m]	[m]	[m]	[m]	[m]	[m]	[dB(A)]	[dB(A)]
462158	20	10	27.5	34.1	5860	990	420	1.8	27.0	7.3	4.3	10.5	10.5	13.2	65	81
		8	23.6	35.3	4670	790	218	1.0	21.0	6.4	3.8	9.1	9.1	11.3	59	75
		6	19.3	37.0	3420	580	89	0.4	16.0	5.3	3.2	7.4	7.4	9.2	51	67
		4	14.8	40.5	2170	370	28	0.2	10.0	4.0	2.5	5.5	5.5	6.8	40	56
		2	9.9	42.0	920	160	20	0.1	4.0	2.4	---	3.2	3.2	3.8	19	35
463158	20	10	37.0	39.1	5860	990	420	1.8	27.0	7.3	4.3	10.5	10.5	13.2	64	80
		8	31.3	40.2	4670	790	218	1.0	21.0	6.4	3.8	9.1	9.1	11.3	58	74
		6	24.8	41.9	3420	580	89	0.4	16.0	5.3	3.2	7.4	7.4	9.2	50	66
		4	17.9	44.8	2170	370	28	0.2	10.0	4.0	2.5	5.5	5.5	6.8	39	55
		2	10.4	46.2	920	160	20	0.1	4.0	2.4	---	3.2	3.2	3.8	18	34
464158	20	10	43.8	46.5	4970	990	420	1.8	23.0	6.6	4.0	9.4	9.4	11.8	62	78
		8	36.1	47.4	3970	790	218	1.0	18.0	5.8	3.5	8.2	8.2	10.1	56	72
		6	27.7	48.7	2910	580	89	0.4	13.0	4.8	3.0	6.7	6.7	8.2	48	64
		4	18.8	50.7	1850	370	28	0.2	8.0	3.7	2.3	5.0	5.0	6.1	37	53
		2	9.6	51.9	790	160	20	0.1	3.0	---	---	2.9	2.9	3.4	16	32

Use our calculation tools on our website to easily calculate heat outputs and other technical data with just a few clicks!
▸ https://www.kampmann.co.uk/hvac/products/unit-heaters/top#Calculate-performance-data

[1] at LPHW 75/65 °C, t_{L1} = 20 °C
[2] The sound pressure levels were calculated with an assumed room insulation of 16 dB(A). This corresponds to a distance of 5 m, a room volume of 3000 m³ and a reverberation time of 2.0 s (in accordance with VDI 2081).

TOP

Heat exchanger steel, galvanised cross-counterflow
Model size 6
EC fan, 230 V, high speed

Technical drawing (Dimensions in mm)

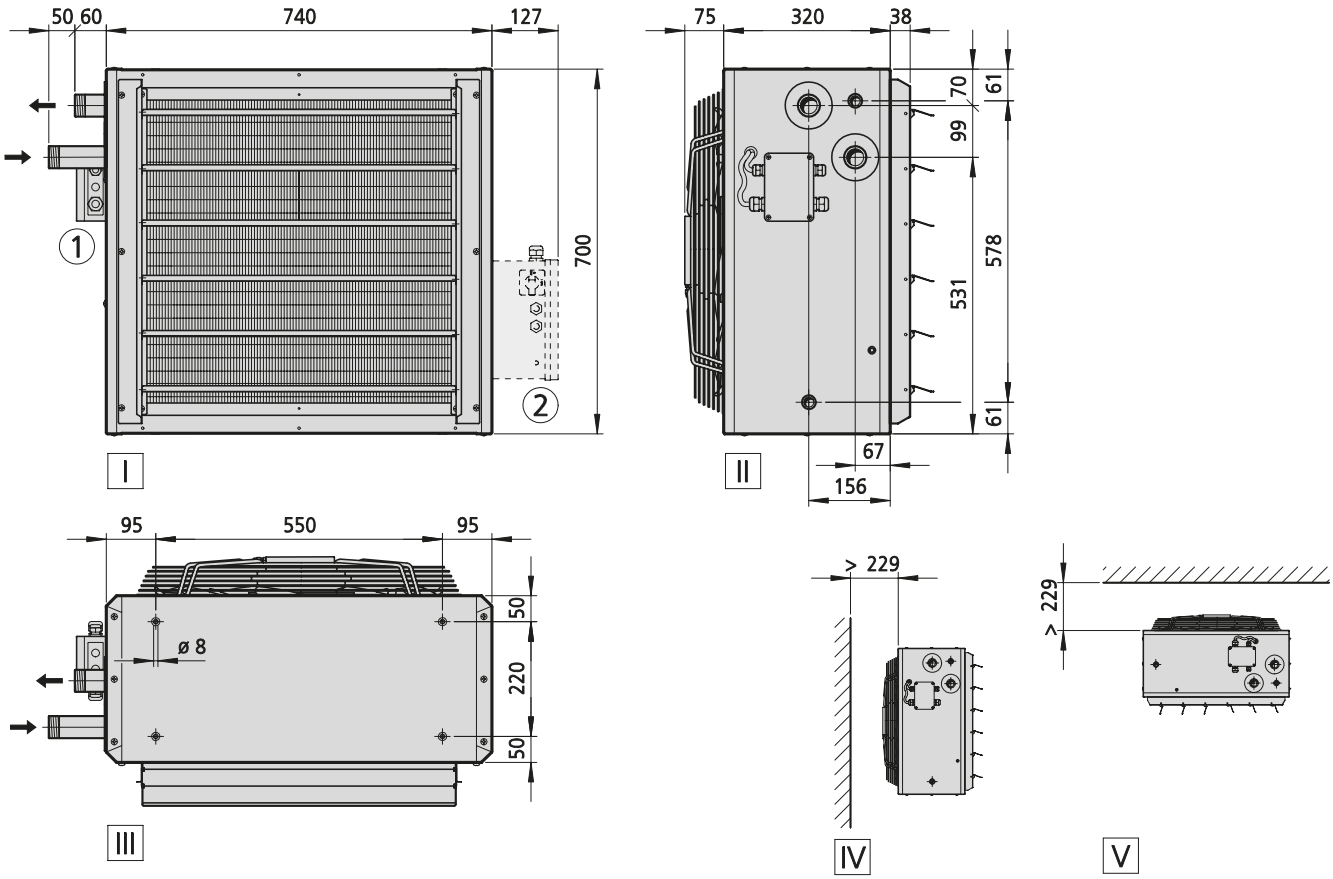

View
- I Front view
- II Side view
- III Top view
- IV Wall-mounted
- V Ceiling-mounted

More information
- 1 Electrical connection for EC model, electromechanical
- 2 Electrical connection for EC model with KaControl (optional)

Specifications

Type	Weight [kg]	Water content [l]	Connection
463358	102	11.5	1 1/4"
464358	123	11.5	1 1/4"

Performance data

Type	Inlet air temperature	Control voltage	Heat output[1]	Outlet air temperature	Air flow	Nominal fan speed	Power consumption	Amperage	Throw (wall-mounted)	Maximum installation height when ceiling-mounted					Sound pressure level[2]	Sound power level
										Louvre	Air diffuser	Outlet nozzle	Induction louvre	KaMAX, vertical slat position		
	[°C]	[V]	[kW]	[°C]	[m³/h]	[1/min]	[W]	[A]	[m]	[m]	[m]	[m]	[m]	[m]	[dB(A)]	[dB(A)]
463358	20	10	27.4	34.1	5860	990	420	1.8	27.0	9.9	6.1	14.6	14.6	16.9	64	80
		8	24.2	35.6	4670	790	218	1.0	21.0	8.6	5.4	12.5	12.5	14.4	58	74
		6	19.8	37.4	3420	580	89	0.4	16.0	7.0	4.5	10.1	10.1	11.6	50	66
		4	14.2	39.7	2170	370	28	0.2	10.0	5.3	3.4	7.4	7.4	8.5	39	55
		2	7.6	41.4	920	160	20	0.1	4.0	3.0	---	4.1	4.1	4.7	18	34
464358	20	10	31.1	38.8	4970	990	420	1.8	23.0	8.9	5.6	13.0	13.0	15.1	62	78
		8	27.7	41.0	3970	790	218	1.0	18.0	7.7	4.9	11.2	11.2	12.9	56	72
		6	22.8	43.6	2910	580	89	0.4	13.0	6.3	4.1	9.1	9.1	10.4	48	64
		4	16.5	46.9	1850	370	28	0.2	8.0	4.8	3.1	6.7	6.7	7.6	37	53
		2	8.8	49.4	790	160	20	0.1	3.0	2.8	---	3.7	3.7	4.2	16	32

Use our calculation tools on our website to easily calculate heat outputs and other technical data with just a few clicks!
▸ https://www.kampmann.co.uk/hvac/products/unit-heaters/top#Calculate-performance-data

[1] at LPHW 80/40 °C, t_{L1} = 20 °C
[2] The sound pressure levels were calculated with an assumed room insulation of 16 dB(A). This corresponds to a distance of 5 m, a room volume of 3000 m³ and a reverberation time of 2.0 s (in accordance with VDI 2081).

TOP

Heat exchanger copper/aluminium
Model size 7
EC fan, 230 V, high speed

Technical drawing (Dimensions in mm)

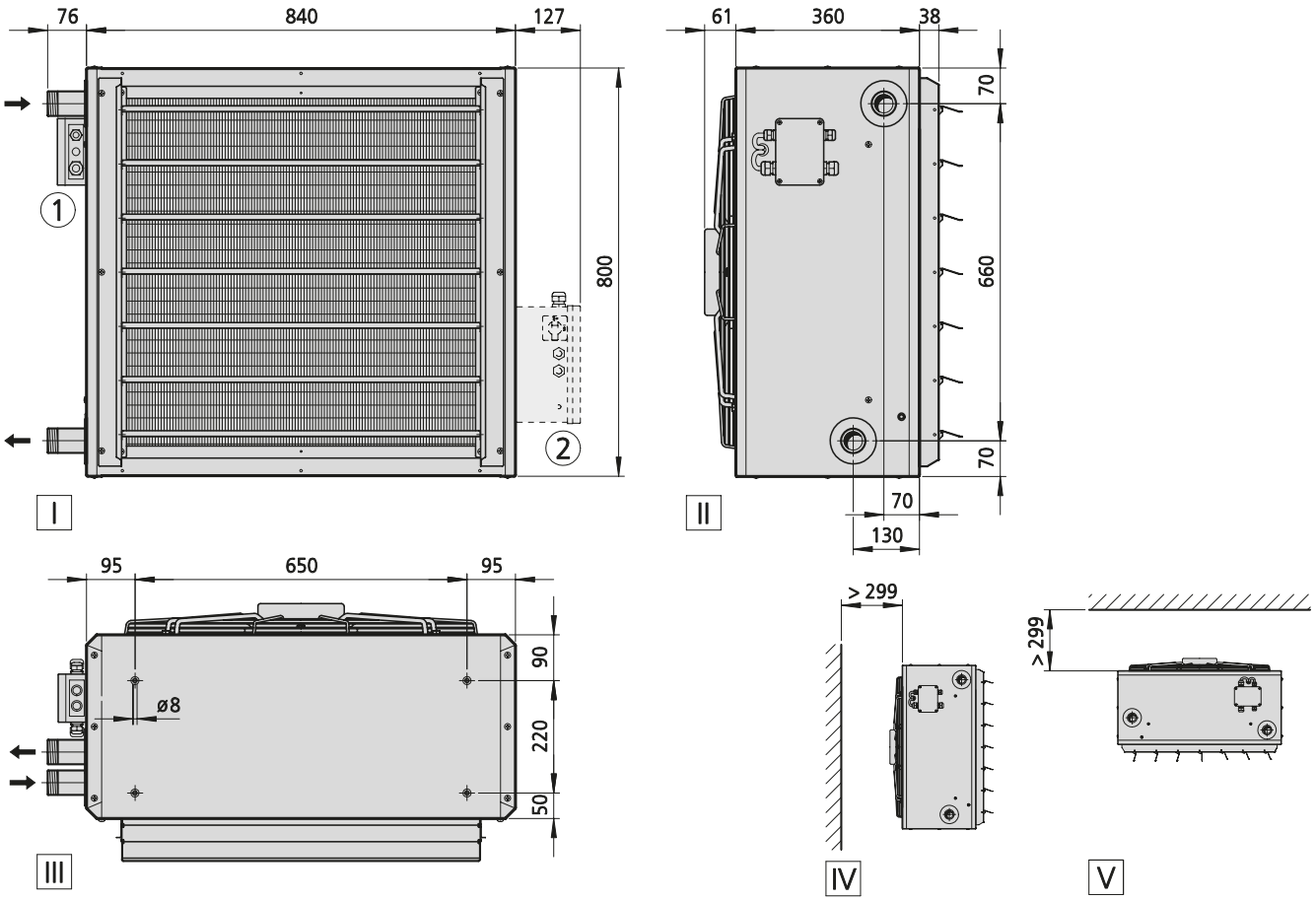

View
I Front view
II Side view
III Top view
IV Wall-mounted
V Ceiling-mounted

More information
1 Electrical connection for EC model, electromechanical
2 Electrical connection for EC model with KaControl (optional)

Specifications

Type	Weight [kg]	Water content [l]	Connection
472058	55	4.8	1 1/2″
473058	59	6.2	1 1/2″
474058	61	7.6	1 1/2″

Performance data

Type	Inlet air temperature	Control voltage	Heat output[1]	Outlet air temperature	Air flow	Nominal fan speed	Power consumption	Amperage	Throw (wall-mounted)	Maximum installation height when ceiling-mounted					Sound pressure level[2]	Sound power level
										Louvre	Air diffuser	Outlet nozzle	Induction louvre	KaMAX, vertical slat position		
	[°C]	[V]	[kW]	[°C]	[m³/h]	[1/min]	[W]	[A]	[m]	[m]	[m]	[m]	[m]	[m]	[dB(A)]	[dB(A)]
472058	20	10	42.7	33.3	9680	1000	685	3.0	40.0	8.5	4.7	13.0	13.0	19.5	65	81
		8	37.7	34.1	8050	835	361	1.6	33.0	7.6	4.3	11.6	11.6	17.2	60	76
		6	31.0	35.7	5960	625	152	0.7	24.0	6.4	3.7	9.6	9.6	14.1	52	68
		4	23.1	39.2	3630	390	50	0.3	14.0	4.8	2.8	7.0	7.0	10.1	40	56
		2	15.3	40.8	1450	170	13	0.3	4.0	2.8	---	3.9	3.9	5.4	18	34
473058	20	10	52.7	38.6	8560	1000	685	3.0	35.0	7.9	4.4	12.0	12.0	18.0	63	79
		8	46.2	39.6	7100	835	361	1.6	29.0	7.1	4.0	10.7	10.7	15.8	58	74
		6	37.4	41.5	5250	625	152	0.7	21.0	6.0	3.4	8.8	8.8	12.9	50	66
		4	27.0	45.7	3170	390	50	0.3	12.0	4.4	2.6	6.4	6.4	9.2	38	54
		2	16.7	47.7	1230	170	13	0.3	3.0	2.6	---	3.5	3.5	4.9	16	32
474058	20	10	71.0	48.2	7600	1000	685	3.0	31.0	7.4	4.2	11.1	11.1	16.6	61	77
		8	60.6	49.1	6280	835	361	1.6	25.0	6.6	3.8	9.9	9.9	14.6	56	72
		6	46.7	50.6	4600	625	152	0.7	18.0	5.5	3.2	8.1	8.1	11.8	48	64
		4	30.3	53.5	2730	390	50	0.3	10.0	4.1	2.4	5.8	5.8	8.3	36	52
		2	14.2	55.0	970	170	13	0.3	2.0	---	---	3.0	3.0	4.1	14	30

Use our calculation tools on our website to easily calculate heat outputs and other technical data with just a few clicks!
▸ https://www.kampmann.co.uk/hvac/products/unit-heaters/top#Calculate-performance-data

[1] at LPHW 75/65 °C, t_{L1} = 20 °C
[2] The sound pressure levels were calculated with an assumed room insulation of 16 dB(A). This corresponds to a distance of 5 m, a room volume of 3000 m³ and a reverberation time of 2.0 s (in accordance with VDI 2081).

TOP

Heat exchanger copper/aluminium
Model size 7
EC fan, 230 V, reduced speed

Technical drawing (Dimensions in mm)

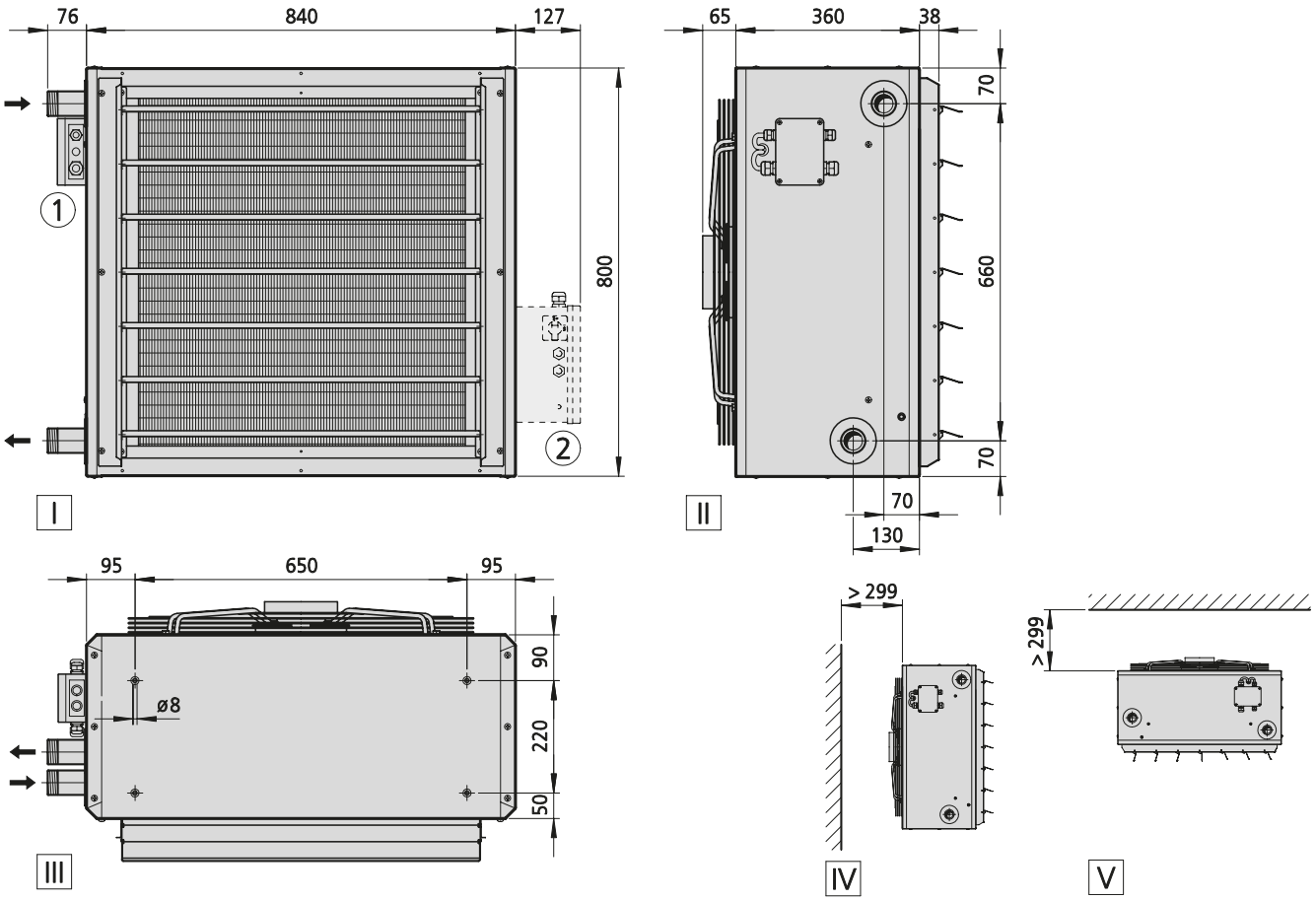

View
I Front view
II Side view
III Top view
IV Wall-mounted
V Ceiling-mounted

More information
1 Electrical connection for EC model, electromechanical
2 Electrical connection for EC model with KaControl (optional)

Specifications

Type	Weight [kg]	Water content [l]	Connection
472056	58	4.8	1 1/2″
473056	62	6.2	1 1/2″
474056	64	7.6	1 1/2″

Performance data

Type	Inlet air temperature	Control voltage	Heat output[1]	Outlet air temperature	Air flow	Nominal fan speed	Power consumption	Amperage	Throw (wall-mounted)	Maximum installation height when ceiling-mounted					Sound pressure level[2]	Sound power level
										Louvre	Air diffuser	Outlet nozzle	Induction louvre	KaMAX, vertical slat position		
	[°C]	[V]	[kW]	[°C]	[m³/h]	[1/min]	[W]	[A]	[m]	[m]	[m]	[m]	[m]	[m]	[dB(A)]	[dB(A)]
472056	20	10	37.0	34.3	7820	780	340	1.5	32.0	7.5	4.2	11.3	11.3	16.9	59	75
		8	31.9	35.4	6240	630	170	0.8	25.0	6.6	3.8	9.8	9.8	14.5	54	70
		6	25.9	37.6	4440	460	71	0.3	17.0	5.4	3.2	7.9	7.9	11.5	45	61
		4	19.7	42.2	2680	295	24	0.1	10.0	4.0	2.4	5.8	5.8	8.2	33	49
		2	14.0	43.7	1110	145	9	0.1	3.0	2.4	---	3.3	3.3	4.5	14	30
473056	20	10	44.0	40.0	6630	780	340	1.5	27.0	6.8	3.9	10.2	10.2	15.1	57	73
		8	37.5	41.5	5260	630	170	0.8	21.0	6.0	3.4	8.8	8.8	12.9	52	68
		6	29.7	44.2	3700	460	71	0.3	14.0	4.9	2.9	7.1	7.1	10.2	43	59
		4	21.8	50.2	2170	295	24	0.1	7.0	3.6	---	5.1	5.1	7.1	31	47
		2	14.3	52.2	810	145	9	0.1	1.0	---	---	2.7	2.7	3.7	12	28
474056	20	10	55.8	49.5	5690	780	340	1.5	23.0	6.2	3.6	9.3	9.3	13.6	55	71
		8	45.7	50.7	4490	630	170	0.8	17.0	5.4	3.2	8.0	8.0	11.6	50	66
		6	33.8	52.7	3120	460	71	0.3	11.0	4.4	2.6	6.4	6.4	9.1	41	57
		4	21.8	56.7	1790	295	24	0.1	6.0	3.2	---	4.5	4.5	6.3	29	45
		2	10.6	58.2	590	145	9	0.1	---	---	---	---	---	3.0	10	26

Use our calculation tools on our website to easily calculate heat outputs and other technical data with just a few clicks!
▸ https://www.kampmann.co.uk/hvac/products/unit-heaters/top#Calculate-performance-data

[1] at LPHW 75/65 °C, t_{L1} = 20 °C
[2] The sound pressure levels were calculated with an assumed room insulation of 16 dB(A). This corresponds to a distance of 5 m, a room volume of 3000 m³ and a reverberation time of 2.0 s (in accordance with VDI 2081).

TOP

Heat exchanger steel, galvanised
Model size 7
EC fan, 230 V, high speed

Technical drawing (Dimensions in mm)

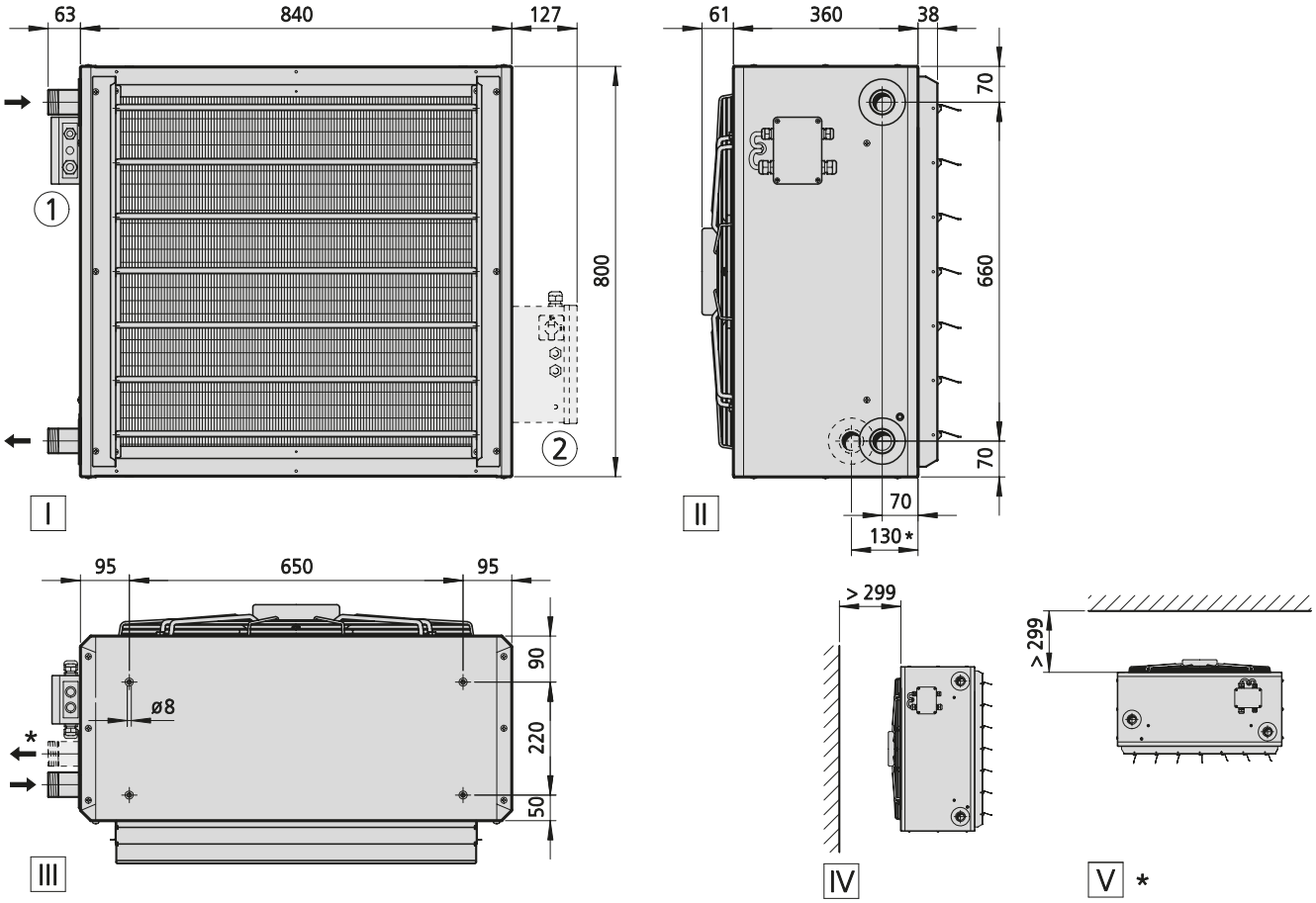

View
- I Front view
- II Side view, 1-layer heat exchanger (* = 2-layer)
- III Top view, 1-layer heat exchanger (* = 2-layer)
- IV Wall-mounted, 1-layer heat exchanger
- V Ceiling-mounted, 2-layer heat exchanger

More information
- ① Electrical connection for EC model, electromechanical
- ② Electrical connection for EC model with KaControl (optional)

Specifications

Type	Weight [kg]	Water content [l]	Connection
472158	103	4.8	1 1/2″
473158	130	6.2	1 1/2″
474158	159	7.6	1 1/2″

Performance data

Type	Inlet air temperature	Control voltage	Heat output[1]	Outlet air temperature	Air flow	Nominal fan speed	Power consumption	Amperage	Throw (wall-mounted)	Maximum installation height when ceiling-mounted					Sound pressure level[2]	Sound power level
										Louvre	Air diffuser	Outlet nozzle	Induction louvre	KaMAX, vertical slat position		
	[°C]	[V]	[kW]	[°C]	[m³/h]	[1/min]	[W]	[A]	[m]	[m]	[m]	[m]	[m]	[m]	[dB(A)]	[dB(A)]
472158	20	10	38.6	33.1	8900	1000	685	3.0	37.0	8.1	4.5	12.3	12.3	18.4	66	82
		8	34.2	33.9	7440	835	361	1.6	30.0	7.3	4.1	11.0	11.0	16.3	61	77
		6	28.5	35.4	5570	625	152	0.7	22.0	6.2	3.5	9.2	9.2	13.4	53	69
		4	21.6	38.7	3490	390	50	0.3	13.0	4.7	2.8	6.8	6.8	9.8	41	57
		2	14.8	40.2	1540	170	13	0.3	5.0	2.9	---	4.1	4.1	5.6	19	35
473158	20	10	48.5	36.4	8900	1000	685	3.0	37.0	8.1	4.5	12.3	12.3	18.4	65	81
		8	42.8	37.3	7440	835	361	1.6	30.0	7.3	4.1	11.0	11.0	16.3	60	76
		6	35.0	39.0	5570	625	152	0.7	22.0	6.2	3.5	9.2	9.2	13.4	52	68
		4	25.8	42.3	3490	390	50	0.3	13.0	4.7	2.8	6.8	6.8	9.8	40	56
		2	16.7	44.0	1540	170	13	0.3	5.0	2.9	---	4.1	4.1	5.6	18	34
474158	20	10	58.9	45.8	6860	1000	685	3.0	28.0	7.0	4.0	10.4	10.4	15.5	63	79
		8	50.7	46.7	5730	835	361	1.6	23.0	6.3	3.6	9.3	9.3	13.7	58	74
		6	39.8	48.0	4290	625	152	0.7	17.0	5.3	3.1	7.8	7.8	11.3	50	66
		4	27.0	50.3	2690	390	50	0.3	10.0	4.0	2.4	5.8	5.8	8.2	38	54
		2	14.4	51.7	1180	170	13	0.3	3.0	2.5	---	3.4	3.4	4.7	16	32

Use our calculation tools on our website to easily calculate heat outputs and other technical data with just a few clicks!
▸ https://www.kampmann.co.uk/hvac/products/unit-heaters/top#Calculate-performance-data

[1] at LPHW 75/65 °C, t_{L1} = 20 °C
[2] The sound pressure levels were calculated with an assumed room insulation of 16 dB(A). This corresponds to a distance of 5 m, a room volume of 3000 m³ and a reverberation time of 2.0 s (in accordance with VDI 2081).

TOP

Heat exchanger steel, galvanised
Model size 7
EC fan, 230 V, reduced speed

Technical drawing (Dimensions in mm)

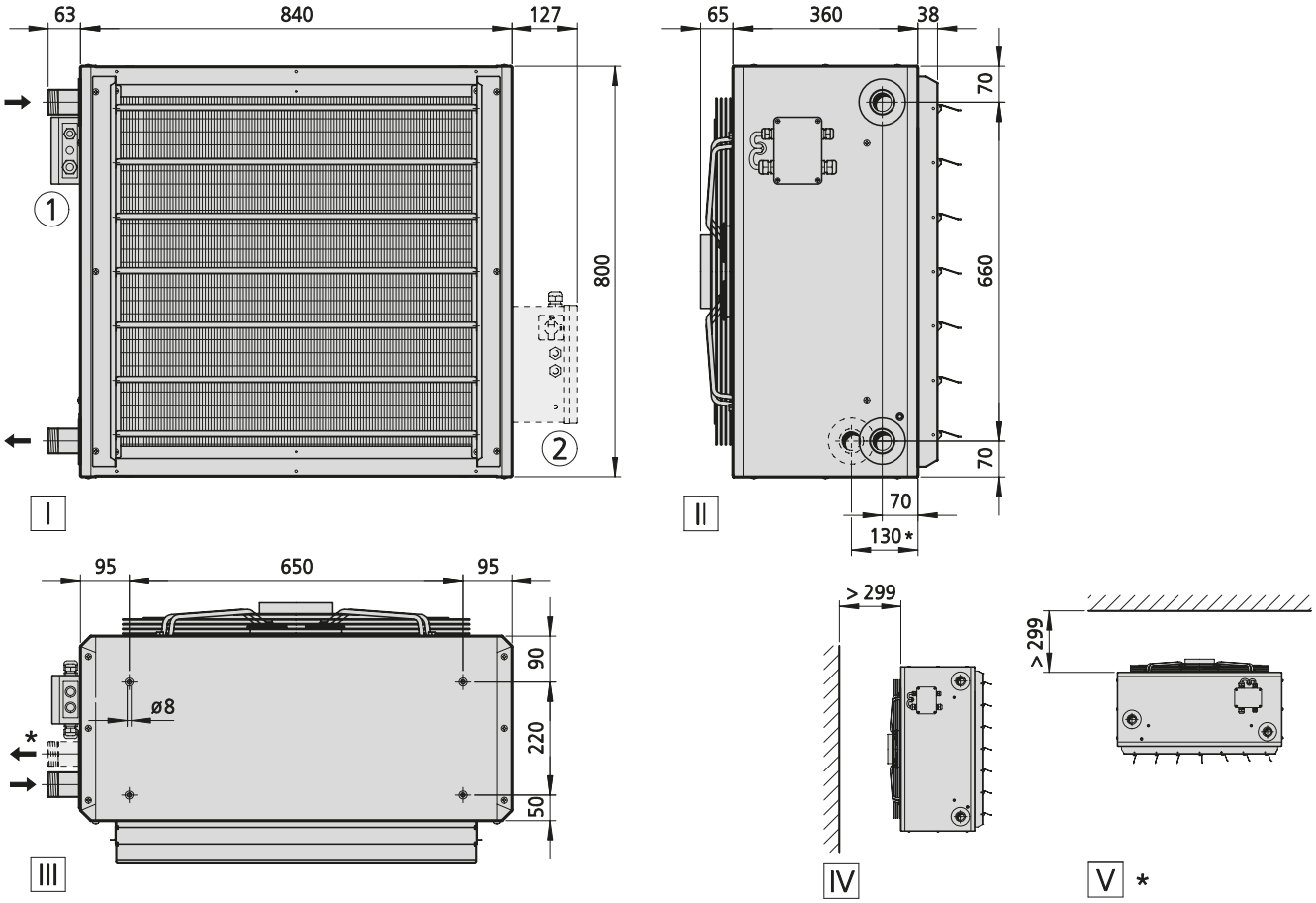

View
I Front view
II Side view, 1-layer heat exchanger (* = 2-layer)
III Top view, 1-layer heat exchanger (* = 2-layer)
IV Wall-mounted, 1-layer heat exchanger
V Ceiling-mounted, 2-layer heat exchanger

More information
1 Electrical connection for EC model, electromechanical
2 Electrical connection for EC model with KaControl (optional)

Specifications

Type	Weight [kg]	Water content [l]	Connection
472156	106	4.8	1 1/2″
473156	133	6.2	1 1/2″
474156	162	7.6	1 1/2″

Performance data

Type	Inlet air temperature	Control voltage	Heat output[1]	Outlet air temperature	Air flow	Nominal fan speed	Power consumption	Amperage	Throw (wall-mounted)	Maximum installation height when ceiling-mounted					Sound pressure level[2]	Sound power level
										Louvre	Air diffuser	Outlet nozzle	Induction louvre	KaMAX, vertical slat position		
	[°C]	[V]	[kW]	[°C]	[m³/h]	[1/min]	[W]	[A]	[m]	[m]	[m]	[m]	[m]	[m]	[dB(A)]	[dB(A)]
472156	20	10	33.1	34.1	7070	780	340	1.5	29.0	7.1	4.0	10.6	10.6	15.8	60	76
		8	28.8	35.3	5690	630	170	0.8	23.0	6.2	3.6	9.3	9.3	13.6	55	71
		6	23.7	37.3	4130	460	71	0.3	16.0	5.2	3.0	7.6	7.6	11.0	46	62
		4	18.6	41.5	2600	295	24	0.1	9.0	3.9	2.4	5.7	5.7	8.0	34	50
		2	13.7	43.0	1230	145	9	0.1	3.0	2.6	---	3.5	3.5	4.9	15	31
473156	20	10	41.3	37.6	7070	780	340	1.5	29.0	7.1	4.0	10.6	10.6	15.8	59	75
		8	35.5	38.8	5690	630	170	0.8	23.0	6.2	3.6	9.3	9.3	13.6	54	70
		6	28.7	41.0	4130	460	71	0.3	16.0	5.2	3.0	7.6	7.6	11.0	45	61
		4	21.8	45.2	2600	295	24	0.1	9.0	3.9	2.4	5.7	5.7	8.0	33	49
		2	15.2	46.7	1230	145	9	0.1	3.0	2.6	---	3.5	3.5	4.9	14	30
474156	20	10	46.5	47.1	5170	780	340	1.5	20.0	5.9	3.4	8.7	8.7	12.8	57	73
		8	38.8	48.1	4160	630	170	0.8	16.0	5.2	3.0	7.6	7.6	11.0	52	68
		6	29.7	49.7	3020	460	71	0.3	11.0	4.3	2.6	6.2	6.2	8.9	43	59
		4	20.6	52.5	1910	295	24	0.1	6.0	3.3	---	4.7	4.7	6.5	31	47
		2	12.0	53.7	910	145	9	0.1	2.0	---	---	2.9	2.9	4.0	12	28

Use our calculation tools on our website to easily calculate heat outputs and other technical data with just a few clicks!
▸ https://www.kampmann.co.uk/hvac/products/unit-heaters/top#Calculate-performance-data

[1] at LPHW 75/65 °C, t_{L1} = 20 °C
[2] The sound pressure levels were calculated with an assumed room insulation of 16 dB(A). This corresponds to a distance of 5 m, a room volume of 3000 m³ and a reverberation time of 2.0 s (in accordance with VDI 2081).

TOP

Heat exchanger steel, galvanised cross-counterflow
Model size 7
EC fan, 230 V, high speed

Technical drawing (Dimensions in mm)

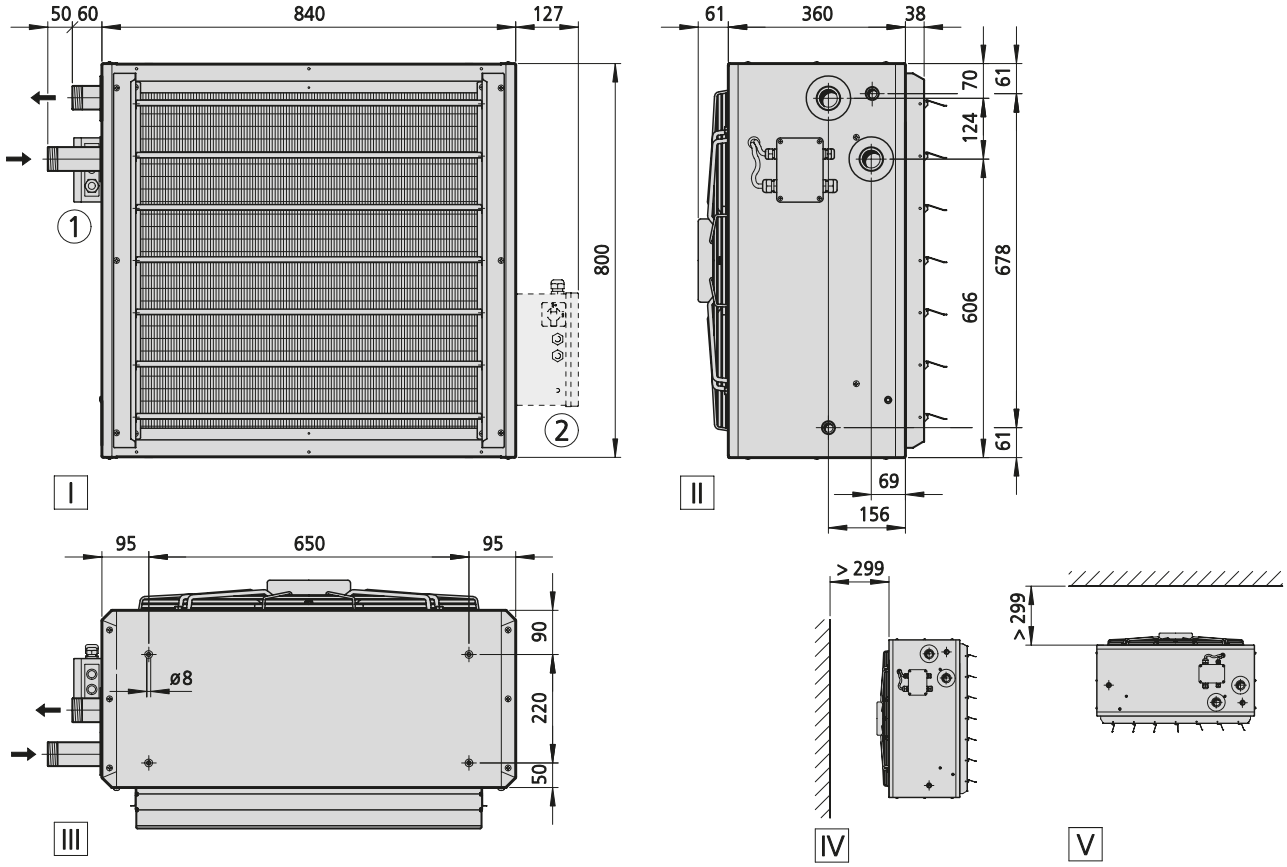

View
- I Front view
- II Side view
- III Top view
- IV Wall-mounted
- V Ceiling-mounted

More information
- ① Electrical connection for EC model, electromechanical
- ② Electrical connection for EC model with KaControl (optional)

Specifications

Type	Weight [kg]	Water content [l]	Connection
473358	131	16.8	1 1/2″
474358	160	16.8	1 1/2″

Performance data

Type	Inlet air temperature	Control voltage	Heat output[1]	Outlet air temperature	Air flow	Nominal fan speed	Power consumption	Amperage	Throw (wall-mounted)	Maximum installation height when ceiling-mounted					Sound pressure level[2]	Sound power level
										Louvre	Air diffuser	Outlet nozzle	Induction louvre	KaMAX, vertical slat position		
	[°C]	[V]	[kW]	[°C]	[m³/h]	[1/min]	[W]	[A]	[m]	[m]	[m]	[m]	[m]	[m]	[dB(A)]	[dB(A)]
473358	20	10	47.1	36.0	8900	1000	685	3.0	37.0	10.4	6.5	15.7	15.7	19.6	65	81
		8	42.4	37.2	7440	835	361	1.6	30.0	9.4	5.9	14.0	14.0	17.3	60	76
		6	35.1	39.0	5570	625	152	0.7	22.0	7.8	5.0	11.6	11.6	14.2	52	68
		4	25.2	41.8	3490	390	50	0.3	13.0	5.9	3.9	8.5	8.5	10.3	40	56
		2	14.2	43.6	1540	170	13	0.3	5.0	3.6	2.4	5.0	5.0	5.9	18	34
474358	20	10	49.2	41.6	6860	1000	685	3.0	28.0	8.9	5.6	13.3	13.3	16.4	63	79
		8	44.2	43.2	5730	835	361	1.6	23.0	8.0	5.1	11.8	11.8	14.5	58	74
		6	36.5	45.6	4290	625	152	0.7	17.0	6.7	4.3	9.7	9.7	11.9	50	66
		4	26.1	49.3	2690	390	50	0.3	10.0	5.0	3.3	7.2	7.2	8.7	38	54
		2	14.8	51.8	1180	170	13	0.3	3.0	3.0	---	4.2	4.2	4.9	16	32

Use our calculation tools on our website to easily calculate heat outputs and other technical data with just a few clicks!
▸ https://www.kampmann.co.uk/hvac/products/unit-heaters/top#Calculate-performance-data

[1] at LPHW 80/40 °C, t_{L1} = 20 °C
[2] The sound pressure levels were calculated with an assumed room insulation of 16 dB(A). This corresponds to a distance of 5 m, a room volume of 3000 m³ and a reverberation time of 2.0 s (in accordance with VDI 2081).

TOP

Heat exchanger steel, galvanised cross-counterflow
Model size 7
EC fan, 230 V, reduced speed

Technical drawing (Dimensions in mm)

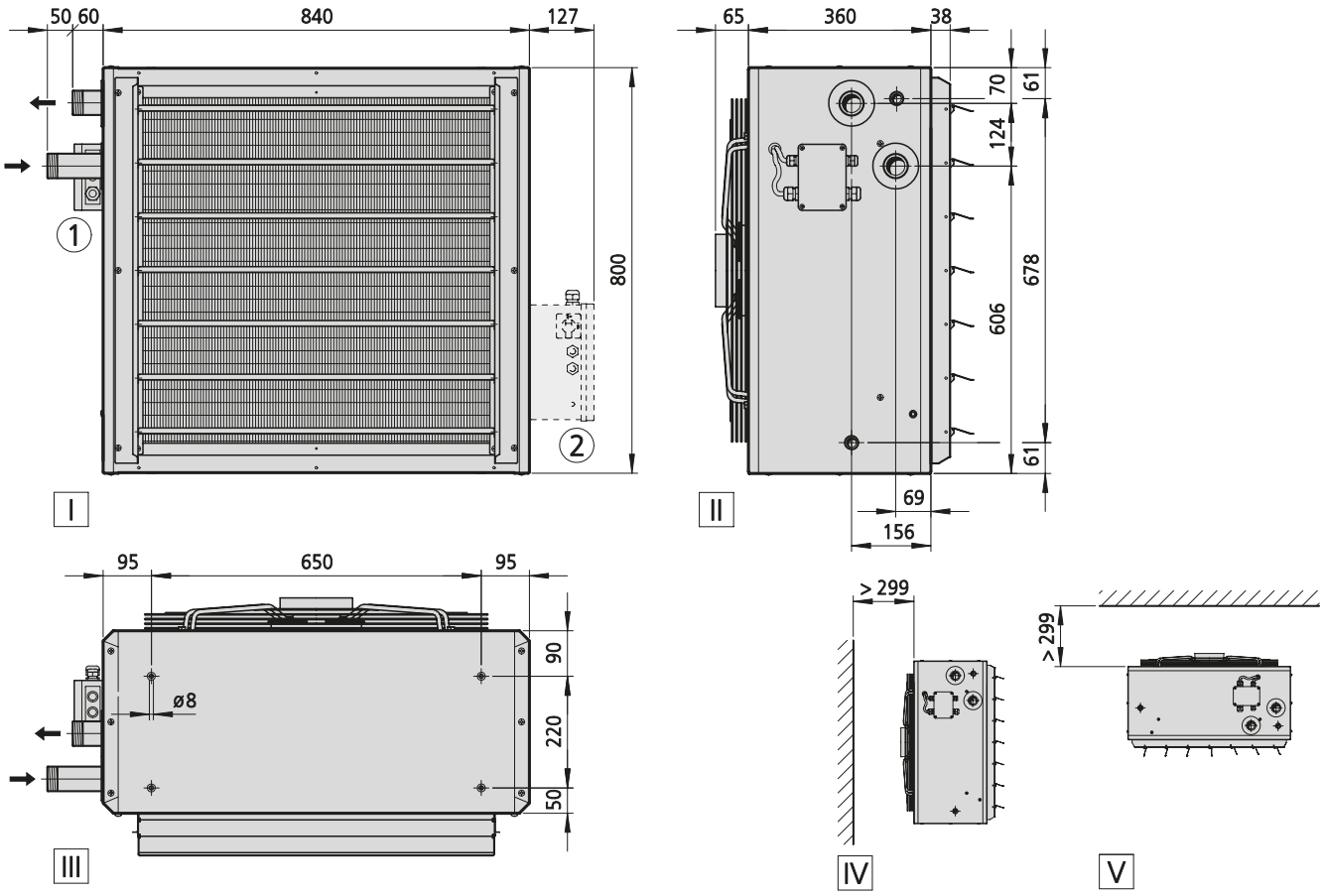

View
- I Front view
- II Side view
- III Top view
- IV Wall-mounted
- V Ceiling-mounted

More information
1. Electrical connection for EC model, electromechanical
2. Electrical connection for EC model with KaControl (optional)

Specifications

Type	Weight [kg]	Water content [l]	Connection
473356	134	16.8	1 1/2″
474356	163	16.8	1 1/2″

Performance data

Type	Inlet air temperature	Control voltage	Heat output[1]	Outlet air temperature	Air flow	Nominal fan speed	Power consumption	Amperage	Throw (wall-mounted)	Maximum installation height when ceiling-mounted					Sound pressure level[2]	Sound power level
										Louvre	Air diffuser	Outlet nozzle	Induction louvre	KaMAX, vertical slat position		
	[°C]	[V]	[kW]	[°C]	[m³/h]	[1/min]	[W]	[A]	[m]	[m]	[m]	[m]	[m]	[m]	[dB(A)]	[dB(A)]
473356	20	10	41.1	37.5	7070	780	340	1.5	29.0	9.1	5.7	13.5	13.5	16.7	59	75
		8	35.6	38.9	5690	630	170	0.8	23.0	7.9	5.1	11.7	11.7	14.4	54	70
		6	28.4	40.8	4130	460	71	0.3	16.0	6.5	4.2	9.5	9.5	11.6	45	61
		4	20.4	43.6	2600	295	24	0.1	9.0	4.9	3.3	7.0	7.0	8.5	33	49
		2	12.3	45.1	1230	145	9	0.1	3.0	3.1	---	4.3	4.3	5.1	14	30
474356	20	10	41.3	44.1	5170	780	340	1.5	20.0	7.5	4.8	11.0	11.0	13.5	57	73
		8	35.7	45.8	4160	630	170	0.8	16.0	6.6	4.3	9.5	9.5	11.7	52	68
		6	28.4	48.4	3020	460	71	0.3	11.0	5.4	3.6	7.7	7.7	9.4	43	59
		4	20.4	52.3	1910	295	24	0.1	6.0	4.1	2.8	5.7	5.7	6.9	31	47
		2	12.5	54.3	910	145	9	0.1	2.0	2.6	---	3.5	3.5	4.1	12	28

Use our calculation tools on our website to easily calculate heat outputs and other technical data with just a few clicks!
▸ https://www.kampmann.co.uk/hvac/products/unit-heaters/top#Calculate-performance-data

[1] at LPHW 80/40 °C, t_{L1} = 20 °C
[2] The sound pressure levels were calculated with an assumed room insulation of 16 dB(A). This corresponds to a distance of 5 m, a room volume of 3000 m³ and a reverberation time of 2.0 s (in accordance with VDI 2081).

TOP

Heat exchanger copper/aluminium
Model size 8
EC fan, 230 V, high speed

Technical drawing (Dimensions in mm)

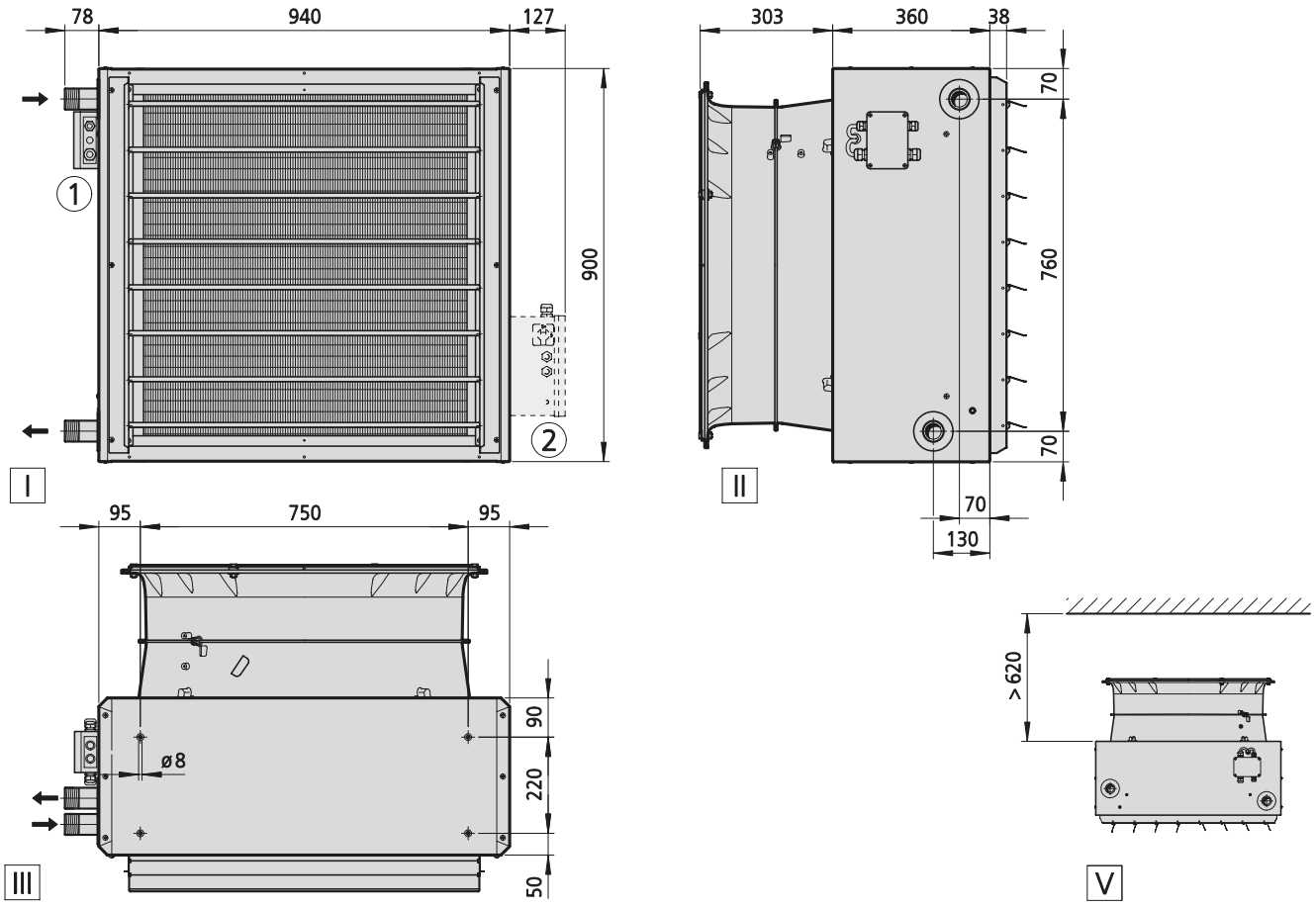

View
I View from below
II Side view
III Front view
V Ceiling-mounted

More information
① Electrical connection for EC model, electromechanical
② Electrical connection for EC model with KaControl (optional)

Specifications

Type	Weight [kg]	Water content [l]	Connection
482068	73	5.3	1 1/2″
483068	74	5.3	1 1/2″
484068	79	6.8	1 1/2″

Performance data

Type	Control voltage	Heat output[1]	Outlet air temperature	Air flow	Nominal fan speed	Power consumption	Amperage	Maximum installation height when ceiling-mounted					Sound pressure level[2]	Sound power level
								Louvre	Air diffuser	Outlet nozzle	Induction louvre	KaMAX, vertical slat position		
	[V]	[kW]	[°C]	[m³/h]	[1/min]	[W]	[A]	[m]	[m]	[m]	[m]	[m]	[dB(A)]	[dB(A)]
482068	10	51.0	33.0	11800	895	617	2.9	8.4	---	14.7	---	21.4	64	80
	8	43.8	34.2	9310	710	326	1.5	7.3	---	12.7	---	18.2	59	75
	6	36.0	35.9	6810	520	139	0.7	6.1	---	10.4	---	14.8	50	66
	4	27.8	39.4	4320	335	56	0.3	4.7	---	7.8	---	10.9	38	54
	2	19.1	40.9	1830	150	39	0.3	2.9	---	4.5	---	6.1	17	33
483068	10	68.3	39.5	10560	895	617	2.9	7.9	---	13.7	---	19.9	62	78
	8	57.9	41.0	8330	710	326	1.5	6.9	---	11.8	---	16.9	57	73
	6	46.7	43.1	6090	520	139	0.7	5.7	---	9.7	---	13.7	48	64
	4	34.9	47.2	3860	335	56	0.3	4.4	---	7.3	---	10.1	36	52
	2	22.3	49.0	1630	150	39	0.3	2.7	---	4.2	---	5.7	15	31
484068	10	89.0	49.3	9160	895	617	2.9	7.3	---	12.5	---	18.1	60	76
	8	73.0	50.5	7210	710	326	1.5	6.3	---	10.8	---	15.4	55	71
	6	56.2	52.2	5260	520	139	0.7	5.3	---	8.8	---	12.4	46	62
	4	38.4	54.9	3320	335	56	0.3	4.1	---	6.6	---	9.1	34	50
	2	19.7	56.4	1370	150	39	0.3	2.5	---	3.8	---	5.1	13	29

Use our calculation tools on our website to easily calculate heat outputs and other technical data with just a few clicks!
▸ https://www.kampmann.co.uk/hvac/products/unit-heaters/top#Calculate-performance-data

[1] at LPHW 75/65 °C, t_{L1} = 20 °C
[2] The sound pressure levels were calculated with an assumed room insulation of 16 dB(A). This corresponds to a distance of 5 m, a room volume of 3000 m³ and a reverberation time of 2.0 s (in accordance with VDI 2081).

TOP

Heat exchanger steel, galvanised
Model size 8
EC fan, 230 V, high speed

Technical drawing (Dimensions in mm)

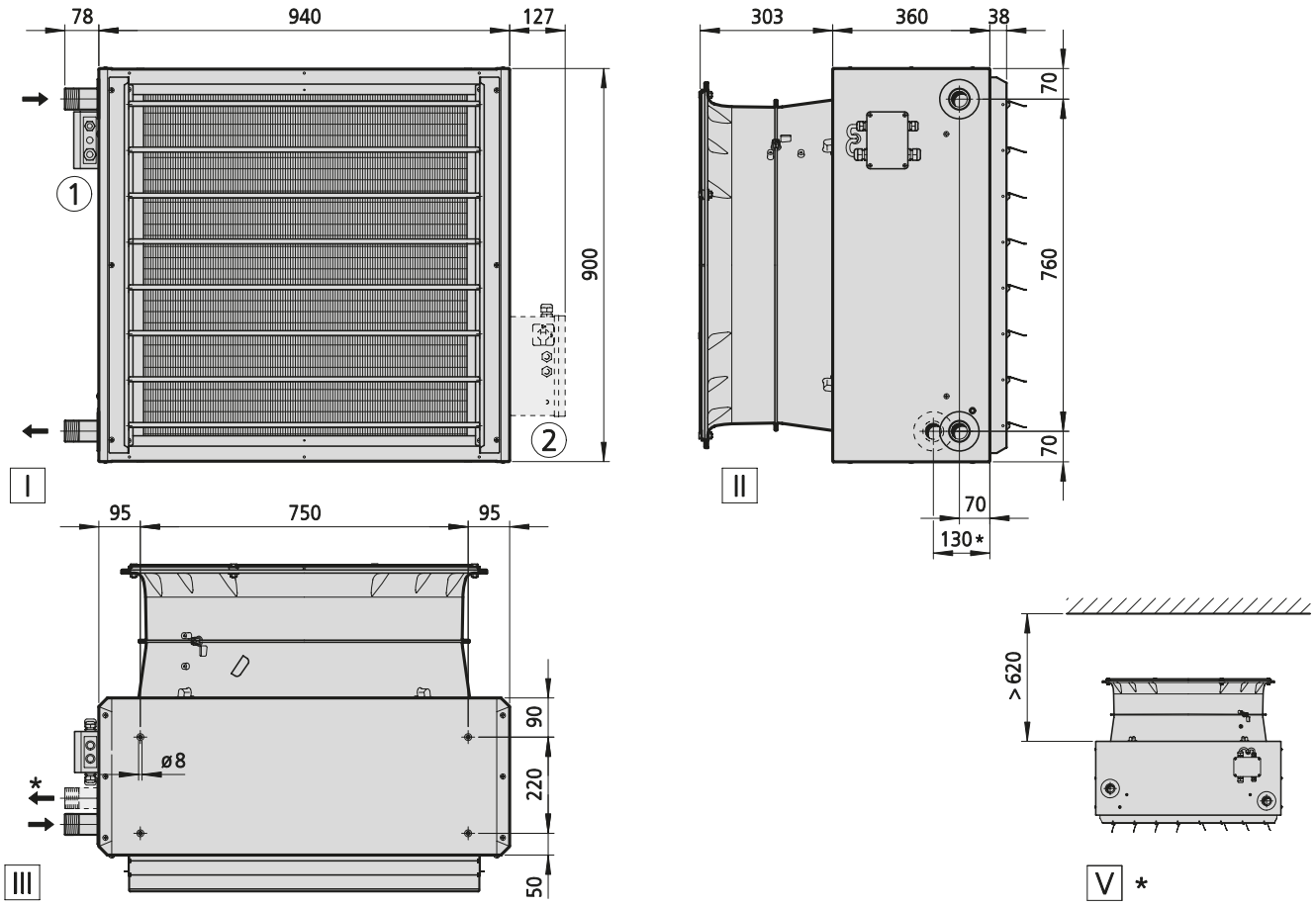

View
I View from below
II Side view, 1-layer heat exchanger (* = 2-layer)
III Front view, 1-layer heat exchanger (* = 2-layer)
V Ceiling-mounted, 2-layer heat exchanger

More information
1 Electrical connection for EC model, electromechanical
2 Electrical connection for EC model with KaControl (optional)

Specifications

Type	Weight [kg]	Water content [l]	Connection
482168	132	8.9	1 1/2″
483168	166	17.0	1 1/2″
484168	203	17.0	1 1/2″

Performance data

Type	Control voltage	Heat output[1]	Outlet air temperature	Air flow	Nominal fan speed	Power consumption	Amperage	Maximum installation height when ceiling-mounted					Sound pressure level[2]	Sound power level
								Louvre	Air diffuser	Outlet nozzle	Induction louvre	KaMAX, vertical slat position		
	[V]	[kW]	[°C]	[m³/h]	[1/min]	[W]	[A]	[m]	[m]	[m]	[m]	[m]	[dB(A)]	[dB(A)]
482168	10	50.1	32.4	12230	895	617	2.9	8.5	---	15.0	---	21.9	65	81
	8	43.1	33.4	9700	710	326	1.5	7.5	---	13.0	---	18.8	60	76
	6	35.6	35.0	7160	520	139	0.7	6.3	---	10.7	---	15.3	51	67
	4	27.7	38.0	4630	335	56	0.3	4.9	---	8.2	---	11.4	39	55
	2	19.2	39.3	2090	150	39	0.3	3.1	---	4.9	---	6.7	18	34
483168	10	68.1	36.8	12230	895	617	2.9	8.5	---	15.0	---	21.9	64	80
	8	57.7	37.9	9700	710	326	1.5	7.5	---	13.0	---	18.8	59	75
	6	46.7	39.7	7160	520	139	0.7	6.3	---	10.7	---	15.3	50	66
	4	35.0	42.8	4630	335	56	0.3	4.9	---	8.2	---	11.4	38	54
	2	22.6	44.2	2090	150	39	0.3	3.1	---	4.9	---	6.7	17	33
484168	10	89.2	45.9	10380	895	617	2.9	7.8	---	13.6	---	19.6	62	78
	8	73.9	46.9	8260	710	326	1.5	6.8	---	11.7	---	16.8	57	73
	6	57.7	48.3	6150	520	139	0.7	5.8	---	9.8	---	13.8	48	64
	4	40.7	50.4	4040	335	56	0.3	4.5	---	7.5	---	10.4	36	52
	2	22.8	51.6	1920	150	39	0.3	3.0	---	4.7	---	6.3	15	31

Use our calculation tools on our website to easily calculate heat outputs and other technical data with just a few clicks!
▸ https://www.kampmann.co.uk/hvac/products/unit-heaters/top#Calculate-performance-data

[1] at LPHW 75/65 °C, t_{L1} = 20 °C
[2] The sound pressure levels were calculated with an assumed room insulation of 16 dB(A). This corresponds to a distance of 5 m, a room volume of 3000 m³ and a reverberation time of 2.0 s (in accordance with VDI 2081).

03 Design information

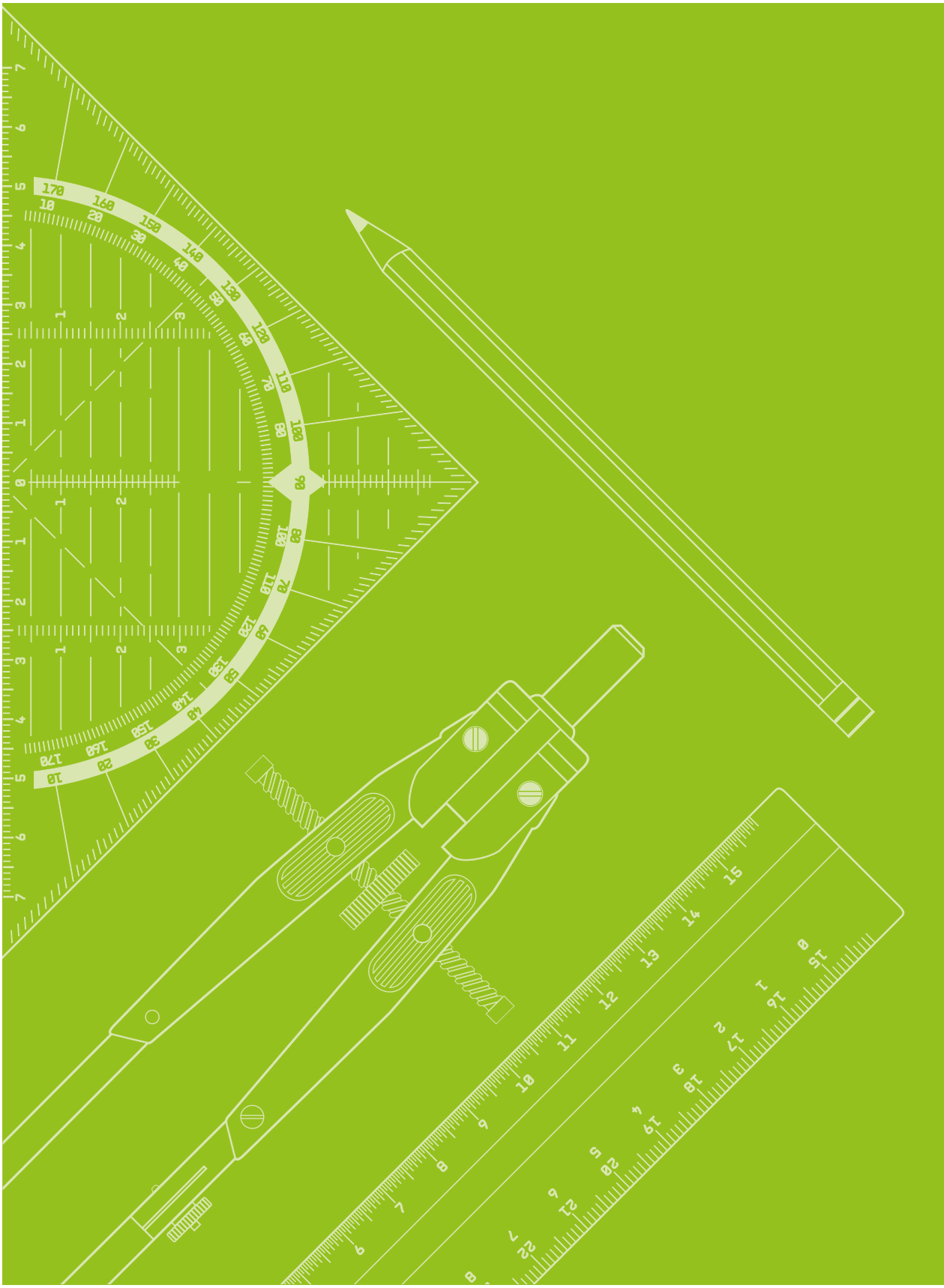

Information on planning and design

The selection and specification of TOP unit heaters depends on more than just the calculated heat load. Among other things, the required air circulation, structural and acoustic conditions, and unit-specific properties need to be taken into consideration.

Number and size of unit heaters

The number and size of unit heaters installed is based on the heat load calculated. This also takes into consideration structural factors, such as the fixing and installation points and the permitted sound level.

In all cases it is better to use several smaller units, as

- the temperature distribution is better
- the air velocities are lower
- lower sound levels can be expected

If only very slow air velocities are required, we would recommend designing the unit heaters so that the required heat output is produced at low to medium fan speed. In practice, design with a control voltage of 6 V has proved itself with EC fans. This leaves some reserve for heating up after longer interruptions (e.g. at weekends).

Air circulation

Designing a unit heater system based on the air circulation has proved itself to be very practical in obtaining a reliable unit selection and uniform air distribution.

$$LU \quad [1/h] = \frac{V_{L\,eff} \cdot n}{V}$$

LU [1/h] = air circulation at the design stage

$V_{L\,eff}$ [m³/h] = effective air volume of the unit heater at the design stage

V [m³] = hall volume

n [–] = number of unit heaters

A design based on the air circulation significantly simplifies the choice of unit heaters. The right gaps between unit heaters can be obtained taking into consideration the maximum mounting heights of the various air outlets without the need for additional calculations.
Should the minimum required air circulation not be possible with the selected unit heaters, as per the table below, then ceiling fans from the accessories range can also be used, refer to chapter "*Ceiling fans for additional air circulation" page 70*.

LU [1/h]	Standard louvres	KaMAX
minimum	2.0	1.5
better	2.5	1.8
good	3 - 3.5	2.5
very good	4 - 5	3.0

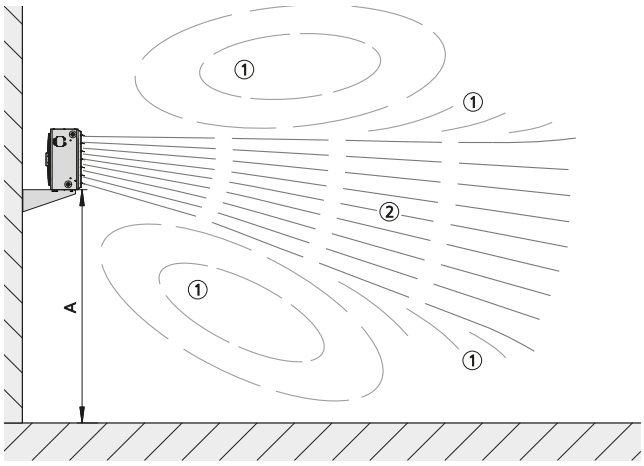

Wall-mounting
A = installation height min. 2.5 m
① = secondary vortex
② = primary air flow

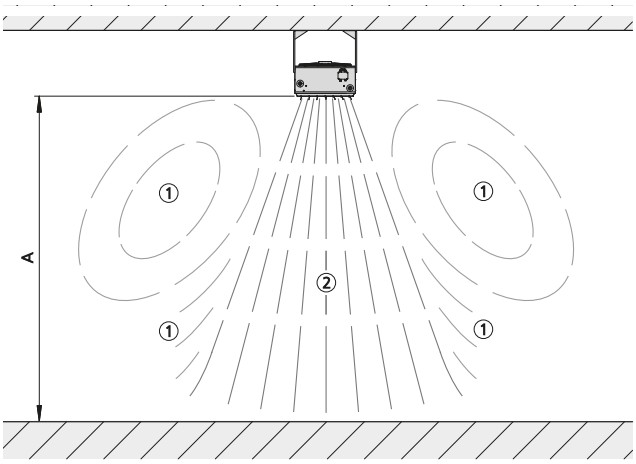

Ceiling-mounting
A = max. mounting height H_{max}
① = secondary vortex
② = primary air flow

Layout of unit heaters

Existing equipment and fixtures in the hall, such as shelving, large production systems, machines, cranes etc., must be taken into consideration when positioning unit heaters in the hall. Workplaces and occupied zones should not be located in the primary air flow from a unit heater, rather in the secondary air vortices.

Wall-mounting

When unit heaters are installed on the wall, the distance from the floor to the underneath of the unit heater should be at least 2.5 metres and at most 4 metres. Mounting heights of > 4 metres cannot guarantee the uniform heating of the occupied zone without the use of additional accessories, such as ductwork etc. The lateral distance between the unit heaters is primarily determined by the air circulation, although gaps of > 15 metres should be avoided. Unit heaters offset opposite each other produce improved air distribution.

Ceiling-mounting

Ceiling installation has a number of decisive advantages over wall installation:

- Energy savings due to lower temperatures under the ceiling. The accumulation of warm air is reduced and heat losses are minimised.
- The layout of the unit heaters depends on the equipment and fixtures and should essentially be free of restrictions caused by structural obstacles.
- A number of special air outlets, such as the KaMAX diffuser, provide for individual choice.
- The distance to the occupied zone enables the air outlets to be ideally positioned to ensure that air reaches the occupied zone essentially draught-free.

The distance of the units from each other comes from the symmetrical arrangement of the units in the space and is determined by the air circulation.

Throw

The throw is directly dependent on

- the room geometry, predominantly the height of the space
- the over-temperature of the air flow
- the equipment in the space
- the air volume
- the air outlet of the unit heater

The throw is defined as the maximum penetration depth of the primary air stream under ideal conditions. The isothermic throw figures given in the performance tables for wall mounting only apply to louvre type 3*002. These values should only be viewed as guideline values, in view of the significant dependency of the throw on the room geometry, equipment and up-current caused by higher outlet temperatures. Assume a maximum penetration depth of the primary air stream of 3 to 4.5 x ceiling height of the space. Large room depths are only indirectly involved in the air exchange through secondary vortices.

Maximum mounting height

The maximum mounting height H_{max} is based on the maximum penetration depth of the air stream into the occupied zone with ceiling mounted units. Like the throw with wall-mounted units, the maximum mounting height is also dependent on the

- room geometry and equipment in the space
- the air volume and air outlet of the unit heater, but especially the over-temperature of the discharged air stream

The maximum mounting heights given in the Technical data (see pages 14 – 59) apply to free-blowing operation at the respective fan speed. The maximum mounting heights dependent on the effective air volume, e.g. when using accessory components, can be seen on the diagrams on *page 67*.

All the stated maximum mounting heights only apply to entering air temperatures of up to 15 K above room temperature. A correction is needed with higher outlet temperatures, see diagram below.

Correction of mounting height

The given maximum mounting heights only apply to entering air temperatures of up to 15 K above room temperature. As the thermal up-current reduces the penetration depth of the primary air stream, the maximum mounting height H_{max} needs to be corrected as follows when the over-temperature of the discharged air is greater than 15 K:

$$H = H_{max.} \cdot f_H$$

H	[m]	=	permitted mounting height
H_{max}	[m]	=	max. mounting height
f_H	[/]	=	mounting height correction factor (see diagram below)

Calculation of the over-temperature of the discharged air:

$$\Delta t_L = t_{L2} - t_i$$

Δt_L	[°C]	=	over-temperature at air outlet
t_{L2}	[°C]	=	leaving air temperature
t_i	[°C]	=	inside temperature of the room

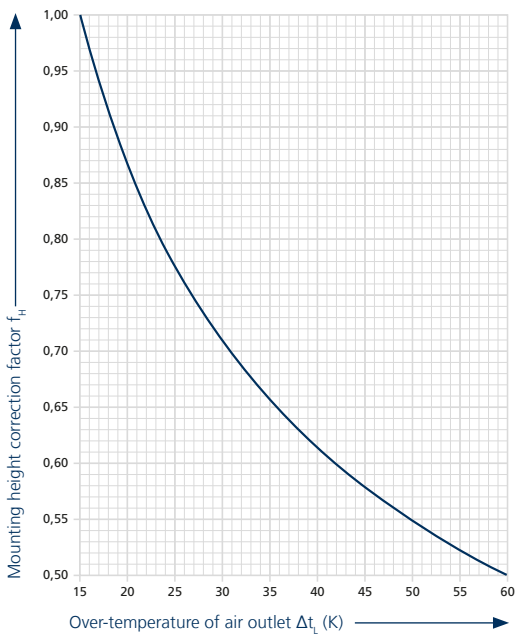

Outlet air temperatures

Please refer to the performance tables for the outlet air temperatures of the different unit heaters (*on pages 15 to 59*). If the use of additional components results in a reduced air volume and thus a lower heat output, or if a temperature difference Δt between the mean water temperature and the air intake temperature has been selected that is not shown in the performance tables, then the outlet air temperature can be calculated as follows:

$$t_{L2} = t_{L1} + \frac{Q_{eff} \cdot 1000}{V_{L\,eff} \cdot C}$$

$_{L1}$	[°C]	=	entering air temperature
t_{L2}	[°C]	=	leaving air temperature
$V_{L\,eff}$	[kW]	=	effective heat output of the unit heater (taking into account accessory components)
C	[Wh/m³ K]	=	multiplier for leaving air temperature calculation

t_{L1}	C	t_{L1}	C
[°C]	[Wh/m3 K]	[°C]	[Wh/m3 K]
+ 20	0.34	± 0	0.36
+ 10	0.35	– 10	0.37

Guideline values for leaving air temperature:

- min. 35 – 40 °C (only go below this temperature at high fan speed or with ceiling installation in high halls)
- max. 50 – 55 °C (max. 45 °C with very high halls)

Primary air flows below 40 °C cause feelings of discomfort when directed at people. Select outlet air-side accessories to ensure that occupied zones are located in the secondary air stream if an air outlet temperature of approx. 40 °C cannot be achieved due to a low flow temperature. When units are ceiling-mounted at heights of greater than approx. 4.5 m, the outlet air temperature should not be too high, as the strong thermal up-current will not evenly heat the lower zones of the space.

KaMAX air outlet

KaMAX air outlet, type 3*111

KaMAX stands for Kampmann-Multi-Air-miX. This indicates the operating method of this tried and tested air outlet.
A number of different factors can adversely affect the distribution of temperature and air circulation in a space:

- increasingly improved thermal insulation
- minimum permissible outlet air temperatures in conjunction with predominantly ceiling-mounted units

KaMAX ensures the systematic mixing of indoor air, bridges thermal lift and thus prevents the formation of undesirable pockets of heat underneath the ceiling:

- transmission heat losses are minimised
- energy costs are reduced
- comfort is enhanced in the occupied zone

Design and effectiveness

Circular slats have a bearing on the inside and outside. The slats are adjusted from the outside by an adjustment lever. The slats feature both a short and a long adjustment lever.
The slats are almost perpendicular to the flow of air in their horizontal position. The narrow air outlet gap between the slats is wide open at the same time and the discharged air is distributed extremely flat with a pronounced swirling effect under the ceiling.
The more the louvre slats are moved into a vertical position, the greater is the gap between the slats. The penetration depth of the air stream increases, at the same time secondary air is increasingly inducted.
In their maximum vertical position, two slats effectively form a nozzle with each other. A diffuser-like cavity thus forms between each nozzle-forming pair of slats. The negative pressure produced at this position causes secondary air to be drawn in which is entrained with the flow of outlet air. The escaping warm primary air flow is intensively mixed with the indoor air, lowering the outlet air temperature, and reducing the thermal lift of the overall air stream.

Benefits

KaMAX does not produce high temperature differences between the floor and ceiling.
Heat that accumulates under the ceiling is drawn in and entrained in the air circulation. A significantly larger volume of air at a pleasant temperature and low speed reaches the occupied zone.
Draughts are effectively avoided.
The vortex of the discharged air, its rotation, can be changed so that both horizontal and vertical air streams with variable induction and penetration can be generated.

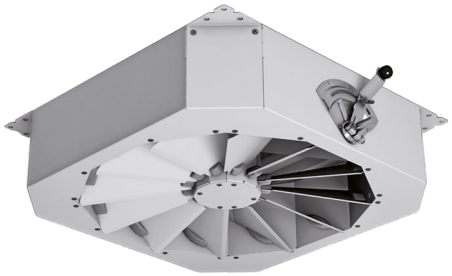

TOP unit heater with KaMAX in vertical position (cross-section)

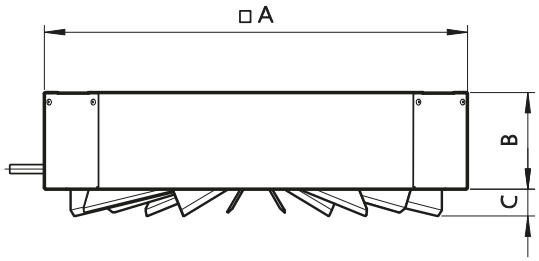

KaMAX dimensions

Dimensions in mm			
Type	A □	B	C
34111	500	165	35
35111	600	165	50
36111	700	165	65
37111	800	165	75
38111	900	165	85

Functions and applications

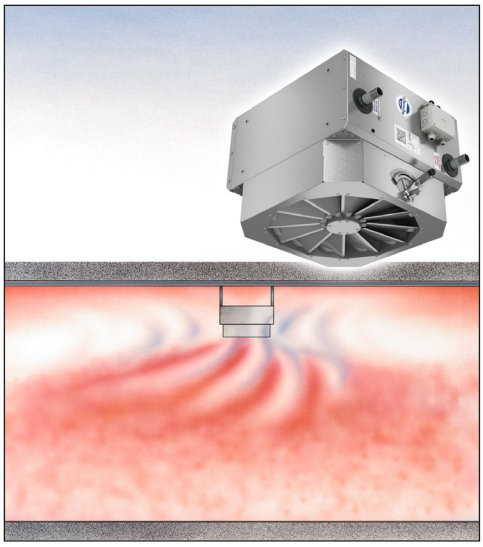

Example 1: Hall height 3–5 m

- The slats are almost horizontal.
- Air is distributed horizontally under the ceiling and flows in a circle around the KaMAX.
- Floor and ceiling air is entrained.
- Even air movements occur.
- Low air velocities in the occupied zone, no draughts and thus greater comfort are achieved.

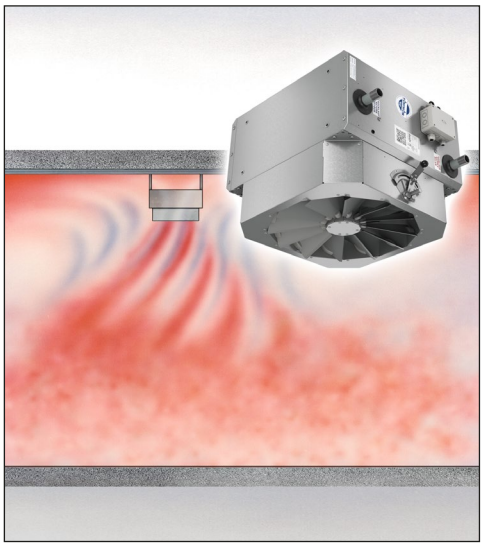

Example 2: Hall height 5–10 m

- The air can be discharged at any angle.
- Thanks to the slightly vertical arrangement of the slats, the percentage of induction air increases directly at the KaMAX air outlet.
- The entire volume of air in the room is drawn into the air exchange through a strong swirling movement.
- A direct primary air stream cannot be felt in the occupied zone.
- As air is inducted, the outlet air temperature falls.
- Intensive mixing of indoor air at low air speed and minimal temperature stratification.
- This produces greater comfort and energy savings.

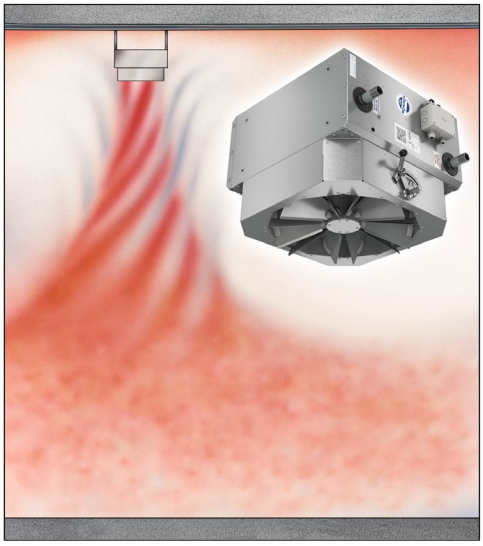

Example 3: Hall height up to 20 m

- The air is discharged predominantly vertically.
- In their maximum vertical position, the slats act as nozzles.
- Air is inducted from all sides, the outlet air temperature significantly falling.
- Twice the volume of air is moved around 2 metres below the KaMAX diffuser.
- High volumes of air are moved at a low temperature and speed, increasing the penetration depth by up to 30%.
- This produces greater comfort and energy savings.
- This discharge position is ideal for the cost-effective heating of very high-ceilinged spaces.

Max. mounting height* model 4

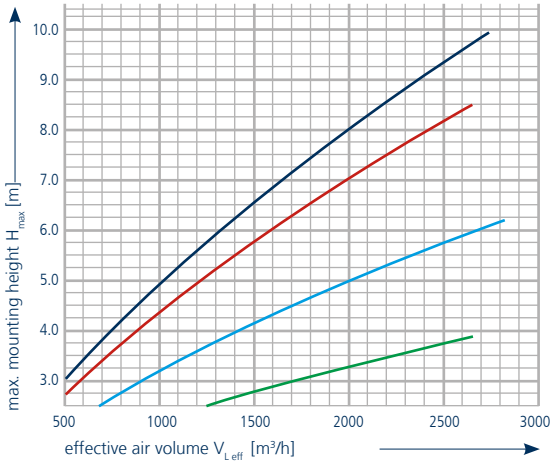

Max. mounting height* model 5

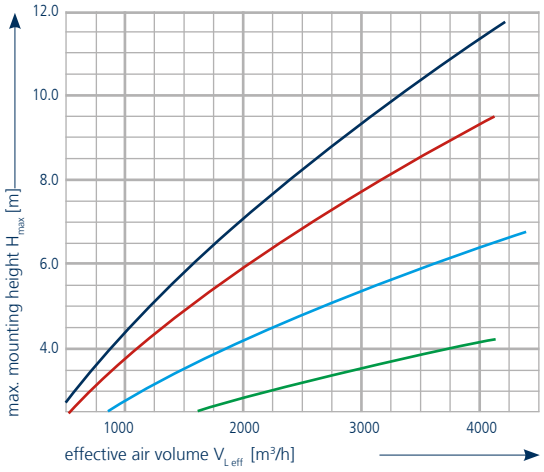

Max. mounting height* model 6

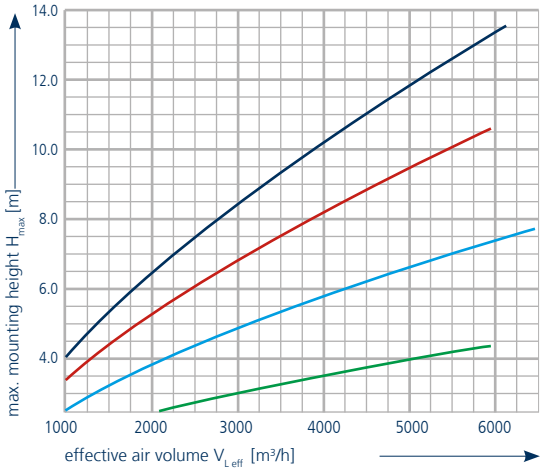

Max. mounting height* model 7

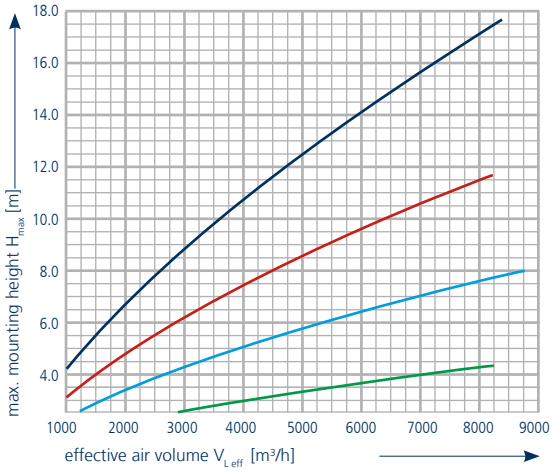

Max. mounting height* model 8

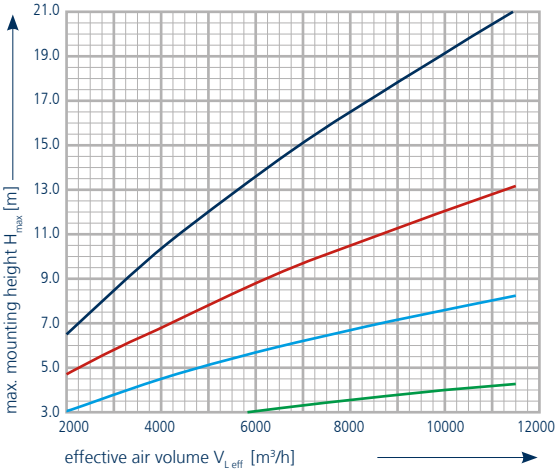

- KaMAX, vertical slat position
- Outlet nozzle; induction louvre
- KaMAX, central position; louvre, one/two-row
- KaMAX, horizontal slat position; 4-way diffuser

* all maximum mounting heights only apply to a leaving air temperature of up to 15 K above room temperature; with higher leaving air temperatures, refer to the air volume and heat output correction factors on *page 69*

Use of accessory components

Lower air volume and heat output is to be expected when accessory components are used.
Accessory components, such as mixing boxes, outside air suction accessories, for ventilation systems, are available on request.

Maximum permissible flow temperature

Important:
Note the maximum flow temperatures to protect the fan!

Maximum flow temperatures*

	Type of installation	
Use	Ceiling	Wall
without shut-off valve	100 °C	120 °C
with shut-off valve	160 °C	160 °C

* Fan models and operation modes for higher temperatures on request.

Long periods of fan idleness with high water temperatures can lead to the impermissible heating up of the fan motor. The flow temperatures should therefore be limited depending on the application and the motor model. If temperature limitation is impossible or inappropriate for the purpose concerned, there is also the option of using suitable valves (thermoelectric, motorised or solenoid) to shut off the heating medium.
This can interrupt the flow of medium before the fan is switched off and the heat exchanger cools down.
Appropriate fan controllers with a fan run-on relay and connection terminals for the motorised valve are available on request.

Connecting frame dimensions of outlet and intake accessories

All the accessory components for the outlet and intake side have standard frame dimensions (with the exception of model 48). The standardised duct connection profile simplifies installation.

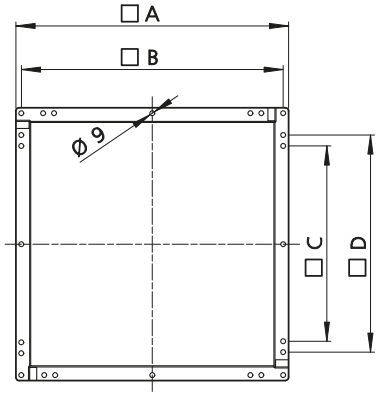

	Dimensions			
Unit heater model	A	B	C	D
44____	500	480	360	400
45____	600	580	460	500
46____	700	680	560	600
47____	800	780	660	700
48____	900	(only discharge-side accessories can be used)		

Resistance figures

The use of accessory components reduces the air as a result of pressure losses and thus also the units' heat output. Correction factors for air volumes and heat outputs can be calculated using all the resistance figures in the table below. The necessary resistance figures are listed in the following table.

Component	Type	Resistance figure Z
KaMAX, central position	3*111	0
KaMAX, vertical slat position	3*111	2
KaMAX, horizontal slat position	3*111	4
Induction louvre	3*101	4
4-way diffuser	3*004	2
Outlet nozzle	3*006	4

Air volume and heat output correction factors

Heat exchanger			Switching stage		Total resistance figures Z															
					2		4		6		8		10		12		14		16	
Copper/ aluminium	Galvanised steel	Cross-counter flow	Motor code 58	Motor code 56	f_L	f_Q	f_L	f_Q	f_L	f_Q	f_L	f_Q	f_L	f_Q	f_L	f_Q	f_L	f_Q	f_L	f_Q
4420	4421 4431	4433	10 V	--	0.97	0.98	0.94	0.96	0.92	0.94	0.90	0.93	0.87	0.91	0.85	0.89	0.82	0.87	0.80	0.86
			6 V	10 V	0.97	0.98	0.95	0.97	0.93	0.95	0.90	0.93	0.88	0.92	0.86	0.90	0.83	0.88	0.81	0.86
			--	6 V	0.99	0.99	0.98	0.99	0.97	0.98	0.95	0.97	0.95	0.97	0.94	0.96	0.92	0.94	0.91	0.94
4430	--	--	10 V	--	0.97	0.98	0.95	0.97	0.93	0.95	0.90	0.93	0.88	0.92	0.87	0.91	0.84	0.89	0.81	0.86
			6 V	10 V	0.97	0.98	0.95	0.97	0.93	0.95	0.90	0.93	0.89	0.92	0.87	0.91	0.85	0.89	0.83	0.88
			--	6 V	0.99	0.99	0.98	0.99	0.97	0.98	0.95	0.97	0.94	0.96	0.93	0.95	0.91	0.94	0.90	0.93
4440	4441	4443	10 V	--	0.99	0.99	0.97	0.98	0.95	0.97	0.93	0.95	0.91	0.94	0.89	0.92	0.87	0.91	0.85	0.89
			6 V	10 V	0.99	0.99	0.97	0.98	0.95	0.97	0.93	0.95	0.91	0.94	0.89	0.92	0.87	0.91	0.86	0.9
			--	6 V	0.99	0.99	0.98	0.99	0.97	0.98	0.96	0.97	0.94	0.96	0.93	0.95	0.91	0.94	0.90	0.93
4520	4521 4531	4533	10 V	--	0.96	0.97	0.94	0.96	0.91	0.94	0.88	0.92	0.85	0.89	0.82	0.87	0.80	0.86	0.77	0.83
			6 V	10 V	0.96	0.97	0.94	0.96	0.91	0.94	0.88	0.92	0.86	0.90	0.83	0.88	0.81	0.86	0.79	0.85
			--	6 V	0.98	0.99	0.96	0.97	0.95	0.97	0.93	0.95	0.91	0.94	0.90	0.93	0.88	0.92	0.86	0.9
4530	--	--	10 V	--	0.97	0.98	0.94	0.96	0.91	0.94	0.89	0.92	0.86	0.90	0.83	0.88	0.81	0.86	0.78	0.84
			6 V	10 V	0.95	0.97	0.93	0.95	0.90	0.93	0.88	0.92	0.86	0.90	0.83	0.88	0.81	0.86	0.79	0.85
			--	6 V	0.98	0.99	0.97	0.98	0.95	0.97	0.93	0.95	0.92	0.94	0.91	0.94	0.89	0.92	0.88	0.92
4540	4541	4543	10 V	--	0.98	0.99	0.95	0.97	0.93	0.95	0.90	0.93	0.88	0.92	0.85	0.89	0.83	0.88	0.80	0.86
			6 V	10 V	0.96	0.97	0.94	0.96	0.92	0.94	0.89	0.92	0.88	0.92	0.85	0.89	0.84	0.89	0.82	0.87
			--	6 V	0.98	0.99	0.96	0.97	0.95	0.97	0.94	0.96	0.93	0.95	0.92	0.94	0.90	0.93	0.88	0.92
4620	4621 4631	4633	10 V	--	0.95	0.97	0.92	0.94	0.89	0.92	0.85	0.89	0.83	0.88	0.79	0.85	0.77	0.83	0.74	0.81
			6 V		0.95	0.97	0.92	0.94	0.89	0.92	0.85	0.89	0.83	0.88	0.79	0.85	0.77	0.83	0.74	0.81
4630	--	--	10 V	--	0.95	0.97	0.92	0.94	0.89	0.92	0.86	0.90	0.83	0.88	0.80	0.86	0.78	0.84	0.75	0.82
			6 V		0.95	0.97	0.92	0.94	0.89	0.92	0.86	0.90	0.83	0.88	0.80	0.86	0.78	0.84	0.75	0.82
4640	4641	4643	10 V	--	0.95	0.97	0.93	0.95	0.90	0.93	0.87	0.91	0.85	0.89	0.83	0.88	0.80	0.86	0.78	0.84
			6 V		0.95	0.97	0.93	0.95	0.90	0.93	0.87	0.91	0.85	0.89	0.82	0.87	0.80	0.86	0.77	0.83
4720	4721 4731	4733	10 V	--	0.93	0.95	0.90	0.93	0.85	0.89	0.81	0.86	0.78	0.84	0.73	0.80	0.71	0.79	0.68	0.77
			6 V		0.93	0.95	0.90	0.93	0.86	0.90	0.82	0.87	0.79	0.85	0.75	0.82	0.72	0.80	0.70	0.78
4730	--	--	10 V	--	0.92	0.94	0.89	0.92	0.85	0.89	0.80	0.86	0.78	0.84	0.73	0.80	0.71	0.79	0.68	0.77
			6 V		0.94	0.96	0.91	0.94	0.87	0.91	0.83	0.88	0.81	0.86	0.77	0.83	0.74	0.81	0.71	0.79
4740	4741	4743	10 V	--	0.93	0.95	0.90	0.93	0.86	0.90	0.82	0.87	0.79	0.85	0.75	0.82	0.72	0.80	0.70	0.78
			6 V		0.94	0.96	0.91	0.94	0.88	0.92	0.84	0.89	0.82	0.87	0.78	0.84	0.76	0.83	0.73	0.8
4820	4821 4831	4833	10 V	--	0.92	0.94	0.84	0.90	outside the limits of use											
			6 V		0.92	0.95	0.85	0.91												
4830	--	--	10 V	--	0.92	0.95	0.86	0.90												
			6 V		0.68	0.95	0.63	0.91												
4840	4841	4843	10 V	--	0.94	0.95	0.88	0.90												
			6 V		0.94	0.95	0.89	0.90												

Calculation formulae

$V_{Leff} = V_L \cdot f_L$

$Q_{eff} = Q_N \cdot f_Q$

Symbols

V_{Leff}	[m³/h]	= effective air volume of the unit heater
V_L	[m³/h]	= nominal air volume of the unit heater (Technical data)
f_L	[/]	= air volume correction factor (air resistance)
Q_{eff}	[kW]	= effective heat output of the unit heater
Q_N	[kW]	= nominal heat output of the unit heater (Technical data)
f_Q	[/]	= heat output correction factor (air resistance)

Water resistance

Please use our online calculation programs to determine the water resistance:

- Kampmann.co.uk/top

The water resistance is formed from:

- the heat output Q_{eff}
- the heating medium temperature difference $\Delta t_w = t_{w1} - t_{w2}$
- the heating medium volumetric flow
- $m = \frac{Q_{eff}}{\Delta t_w} \times 0.86$

Noise

There is minimal noise from these units due to the aerodynamic design of the whisper-quiet sickle-blade fan. Flow noise is reduced because of the sickle-shaped design of the profiled blades combined with the optimised inlet nozzle.
The uniform spread over the entire frequency range, minimising blade passing noise, reduces unpleasant peaks of noise. Nevertheless, take into account the permissible noise levels when designing unit heaters.

Sound pressure level

The A-rated sound pressure levels given in the technical data *(pages 14 to 59)* have been calculated with an assumed room insulation of 16 dB(A). This corresponds to a clearance of 5 m, a room volume of 3000 m³ and a reverberation time of 2.0 s (in accordance with VDI 2081). The actual sound pressure level may differ significantly from the given figures, depending on the room geometry, absorption capacity of the space, equipment, accessories etc.

Sound power level

The sound power level describes the noise emission from the units, independent of the space and distance. The sound pressure levels can be calculated when the room geometry and absorption values are known. The sound power levels have been determined using the enveloping surface process according to DIN 45635-56.

Ceiling fans for additional air circulation

Ceiling fans can be used to increase air recirculation and prevent the accumulation of heat underneath the ceiling. When designing the system, consider the minimum required air circulation, referring also to the chapter "Air circulation" *on page 61*.

Technical data

Fan diameter	1420 mm
Max. speed	300 rpm
Moved air volume	15000 m³/h
Operating voltage	230 V/50 Hz
Power consumption	75 W
Max. current consumption	0.35 A
Sound pressure level (1 m distance)	52 dB(A)
Protection class	I20
Rotor diameter	1420 mm
Height	690 mm
Weight	9.5 kg
Minimum mounting height	
Lower edge of fan	2.5 m
Max. mounting height	10 m

In winter:

- Air stratification with accumulated heat under the ceiling is reduced and, as a result, energy is saved.
- The transmission heat loss is reduced, thanks to the minimal temperature difference between the outside temperature and indoor temperature under the ceiling.
- It is possible to quickly and evenly heat up the space, particularly in the event of infrequent use of halls and larger spaces.
- The pre-heating time is significantly shortened (and/or the night set-back time is extended), resulting in additional savings.

In summer:

- Pleasant layered effect due to the high air circulation.
- No need to change the outlet direction due to high suspension height in halls.

Installation examples

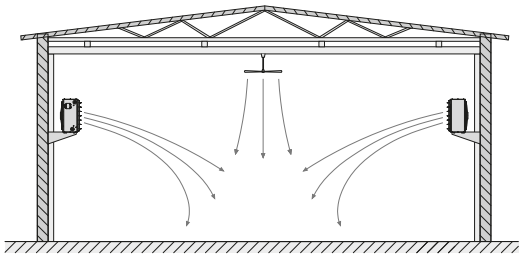

Example 1: TOP wall-mounted with additional ceiling fan

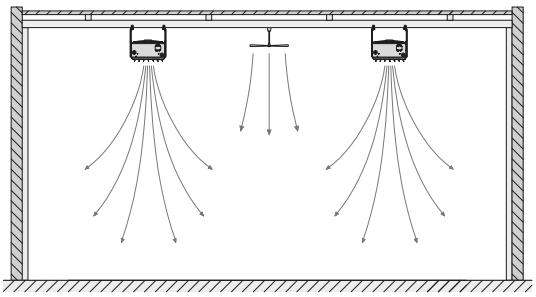

Example 2: TOP ceiling-mounted with additional ceiling fan

Position

In an ideal world, the fans will alternate symmetrically with the unit heaters, with the same gaps in between. Some of the ceiling fans should always be installed at the highest point in the room. This avoids pocket of warm air. Varying the height of the ceiling fans with ceilings of over 10 metres in height helps to reduce vertical temperature stratification.
The use of TOP unit heaters without heat exchanger with special air outlets (e.g. KaMAX) help to balance the temperature down to the floor, should it not be possible to vary the height of the ceiling fans due to the structural conditions on site (e.g. high-bay warehouses, crane etc.). These units are available on request.

Hybrid ECO System

Air exchange separate from temperature control for comfort and efficiency

Industrial premises, workshops and retail stores are now not only heated and air conditioned by unit heaters, but also supplied with outside air. In this configuration, the extract air is discharged out of the building by means of natural overflow in accordance with Regulation (EU) 1253/2014 without previously recovering the heat contained in it. High energy costs are the result.

Unlike simple ventilators that supply fresh air to a building, ventilation units with heat recovery offer the benefit of recovering heat from the extract air into the supply air in accordance with Regulation (EU) 1253/2014.
If these units have an integral heating and cooling function, their many accessory components and long lengths of ductwork mean that they have to overcome high air-side resistance. What is more, the fans need a lot of energy. The surfaces of the air ducts are significantly larger and poorly insulated than pipes transporting water to generate energy. Too much energy is lost here as well. TOP unit heaters and the KaCompact ventilation unit, for example, have been designed to fulfil these two tasks, ventilation and temperature control, separately but here recovering heat as well.

The KaCompact feeds filtered outside air into the building and removes exhaust air out of the building, like a conventional centralised ventilation unit. In addition, a rotary heat exchanger transfers heat from the exhaust air to the outside air/supply air and recovers a large proportion of the thermal energy that would otherwise be lost. In doing so, it obviates the need for the equipment needed with large centralised ventilation units, like chiller, heater and long lengths of ductwork. The temperature of the air is not adjusted (heating/cooling) in the ventilation unit, but rather outside in the TOP unit heater.

One of the major benefits of this separation is the fact that the ventilation unit only needs to be operated with the required exchange of air. Only ultra-efficient TOP unit heaters are operated at times when only heating or cooling is needed.
The energy-saving principle of the separation of functions is known as the Kampmann "Hybrid ECO system" and has been used by many customers for many years.

The ventilation units are extremely important in this system and are designated as "fresh ventilators" if they fulfil the following criteria:

- heat recovery by means of a rotary heat exchanger or counterflow plate heat exchanger
- energy-saving continuously variable EC fans for precise adjustment of the air volume
- KaControl AUL control panel for control of the ventilation units and the TOP unit heaters

Possible ventilation units for combining with TOP unit heaters include:

- Airblock FG
- Airblock KG
- KaCompact

Suggested combination of TOP unit heater with KaCompact ventilation unit

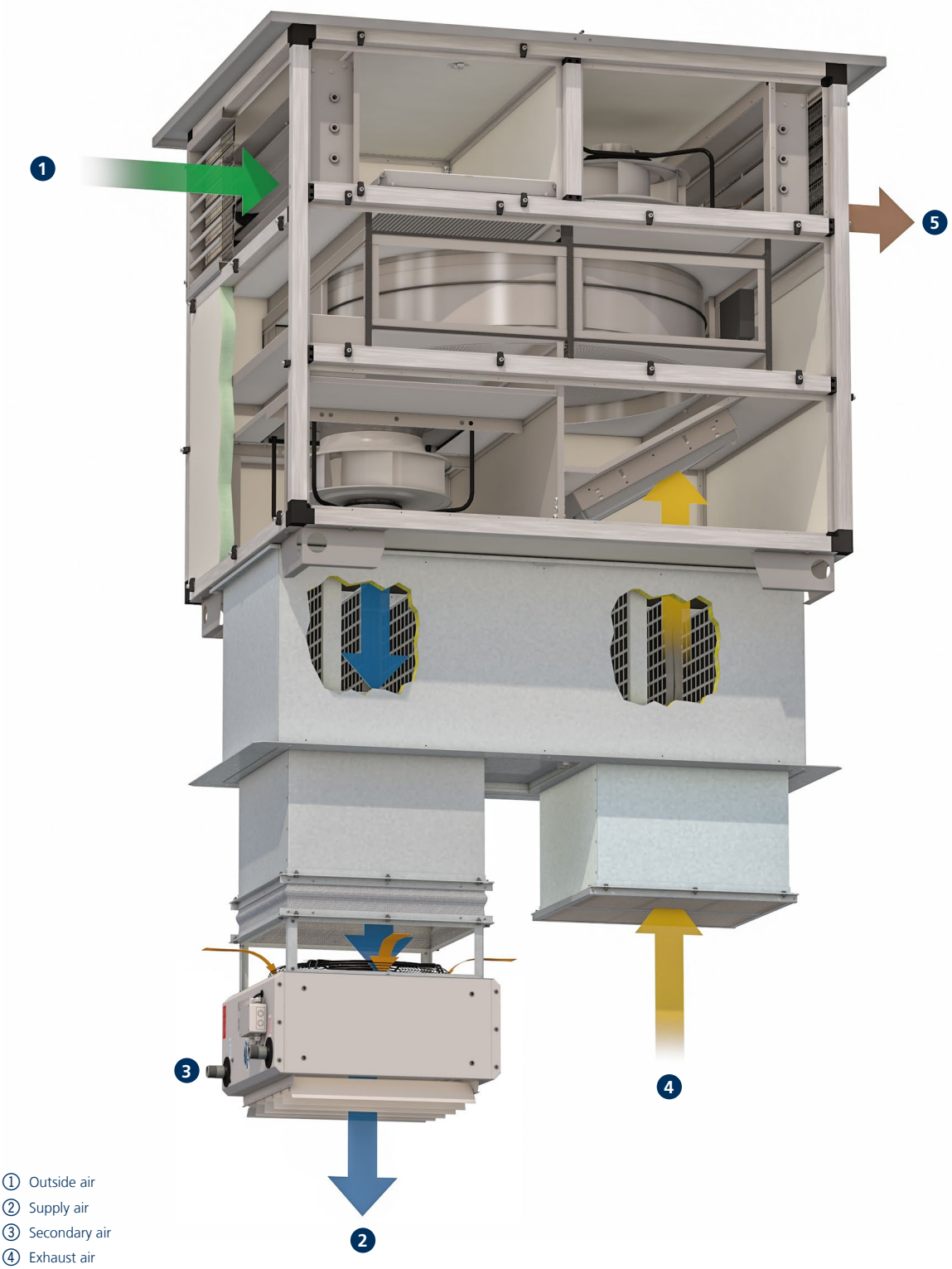

① Outside air
② Supply air
③ Secondary air
④ Exhaust air
⑤ Extract air

04 Control

Control of TOP – electromechanical model

Product features

The EC fans used can be continuously variably controlled by a 0-10 V DC signal.
The "intelligent" motor electronics detects any possible motor fault and automatically switches the fan off. This fault can be externally evaluated. The entire group or individual units are shut down in the event of a motor fault, depending on the control version. The speed can be limited to approx. 50 % of the maximum speed by the potentiometer in the junction box. Actuation by Modbus-RTU instead of by a 0-10 V DC signal is possible depending on the type of unit heater.

Operating units

Four different controls are available for operation and control.

Speed controller, type 30510

Continuously variable speed controller for combination with a thermostat for room temperature-dependent two-point control of heating or cooling units in closed rooms. The fan speed is set manually on the speed controller at between 0-100%. The thermostats activate the ventilation units at the pre-set speed depending on the temperature. It is possible to automatically switch between day and night mode using solutions with timer programs (type 30056; type 30076).

Room thermostat, type 30155

The EC recirculating air control type 30155 enables the operation and temperature control of heating/cooling recirculating air units in 2- or 4-pipe mode. The room temperature can be set on a rotary dial. The temperature is controlled by a fan and valve. In principle, the ventilation unit is switched on and off depending on the temperature, and at the same time the valve is open/closed. The fan can be operated manually at 3 stages or continuously variably in Automatic mode. The control is also equipped with a frost protection function.

Clock thermostat, type 30256

The EC recirculating air control type 30256 enables the operation and temperature control of heating/cooling recirculating air units for 2- or 4-pipe mode. The room temperature can be set using the functional keys. The temperature is controlled by a fan and valve. In principle, the ventilation unit is switched on and off depending on the temperature, and at the same time the valve is open/closed. The fan can be controlled at 10 stages, both in automatic mode as well as in manual mode. The control is also equipped with an automatic summer/winter changeover and a frost protection function. The built-in timer program also allows day or week programs to be set.

Electronic speed controller, type 30515

The continuously variable electronic compact controller is designed for the operation of up to 10 recirculating air units (2-pipe heating/cooling) with EC fans, to heat and cool rooms. The controller has a temperature control, which works with a fan and shut-off valve. The temperature setpoint can be set for day and night mode. A digital timer, including day, night and week program, is also included. The room sensor supplied is installed separately.
Optionally, a mean value can be formed using 2 or 4 room sensors. Apart from continuously variable speed control, the fan speed can also be manually set. Otherwise, among other things, the control has a frost protection function, an external enable switch and a potential-free operating and collective fault alert. If required, the fan can also be used for pure air circulation without heating or cooling.

Cabling

The following points need to be taken into account with the cabling and wiring diagrams below:

- Comply with the details on type of cable and cabling taking into consideration VDE 0100.
- None *: NYM-J. The requisite number of wires, including protective conductor, is stated on the cable. Cross-sections are not stated, as the cable length is involved in the calculation of the cross-section.
- With *: J-Y(ST)Y 0.8 mm, max. 100 m between the speed controller and the last unit heater; provide a shield on one side when longer than 20 m. Lay separately from power lines.
- With **: Sensor line 1.5 mm² e.g. J-Y(ST)Y, 4 x 2 x 0.8 mm, max. 100 m, lay separately from power lines.
- With ***: J-Y(ST)Y, 0.8 mm, max. 50 m, lay separately from power lines.
- With ****: J-Y(ST)Y, 0.8 mm, max. 100 m. Lay separately from power lines.
- If other types of cables are used, they must be at least equivalent.
- The terminals on the unit are suitable for a maximum wire cross-section of 2.5 mm², the mains plug for max. 4.0 mm².
- Any RCCBs used must be pulsating current-sensitive (type A). When the power supply to the unit is switched on, pulsating charging currents from the capacitors in the integral EMC filter can cause FI cut-outs to trip. We recommend the use of RCCBs with a tripping threshold of 300 mA.
- The electrical data listed in the following table needs to be considered when configuring the mains supply and fuses on site.

Maximum connectible unit heaters with EC fan per speed control

Speed control			
Type 30510	Type 30155	Type 30256	Type 30515
[Quantity]	[Quantity]	[Quantity]	[Quantity]
10	2	2	10

Electrical data for TOP, electromechanical model

Unit heater type	Nominal voltage [V]	Mains frequency [Hz]	Active power [kW]	Nominal current [A]	Leakage current [mA]	Max. fuse [A]	IP protection rating	Protection class
44xx56	230	50/60	0.14	1.27	< 3.5	B10	54	I
44xx58	230	50/60	0.17	1.46	< 3.5	B10	54	I
45xx56	230	50/60	0.17	1.51	< 3.5	B10	54	I
45xx58	230	50/60	0.39	1.74	< 3.5	C16	54	I
46xx58	230	50/60	0.46	2.13	< 3.5	C16	54	I
47xx56	230	50/60	0.37	1.69	< 3.5	C16	54	I
47xx58	230	50/60	0.85	3.83	< 3.5	C16	54	I
48xx68	230	50/60	0.68	3.11	< 3.5	C16	54	I

xx Heat exchanger model

Cabling of TOP (**00), actuation by speed controller type 30510

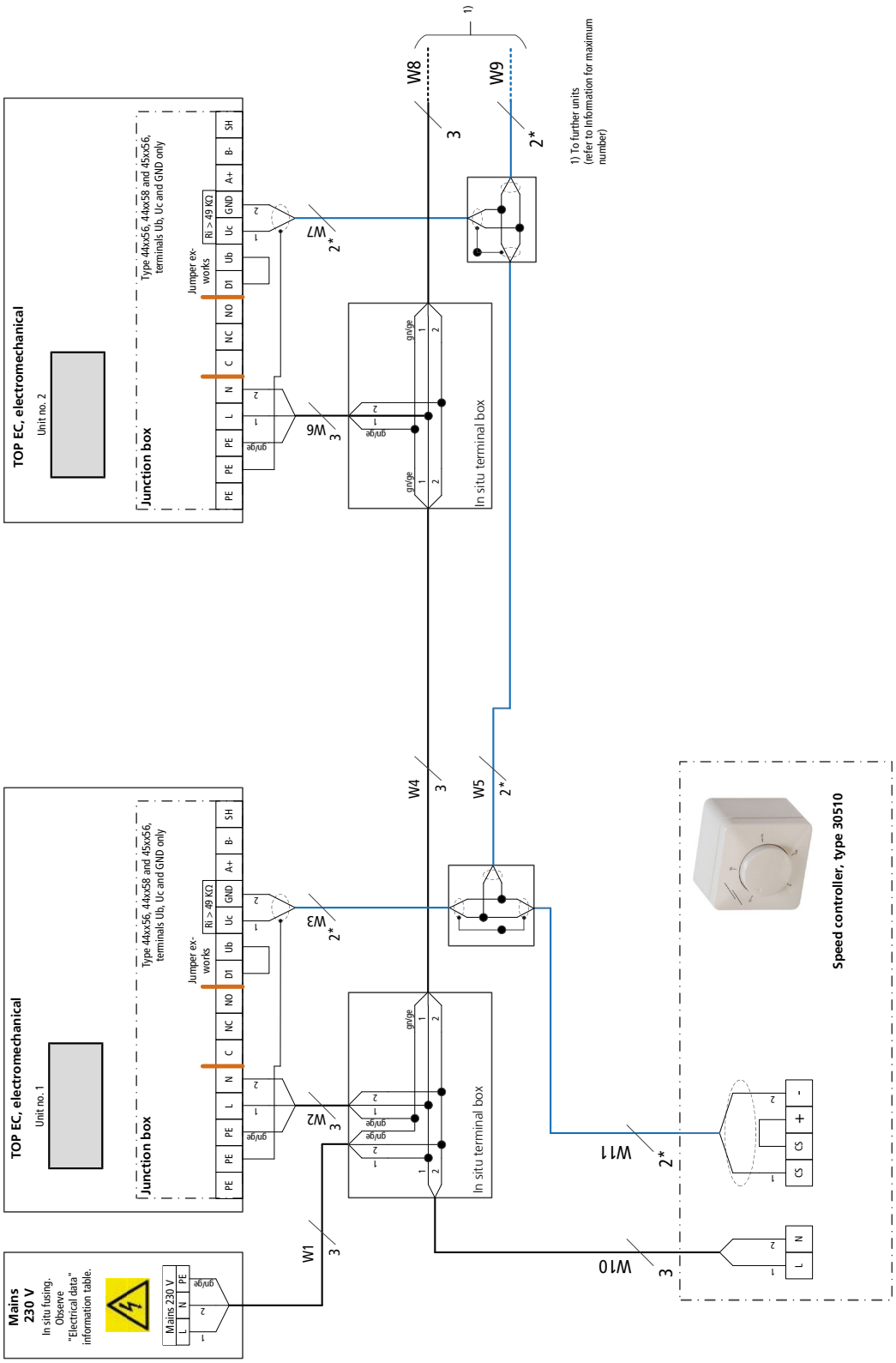

Cabling of TOP (**00), actuation by speed controller type 30510 with industrial thermostat type 30058/30059

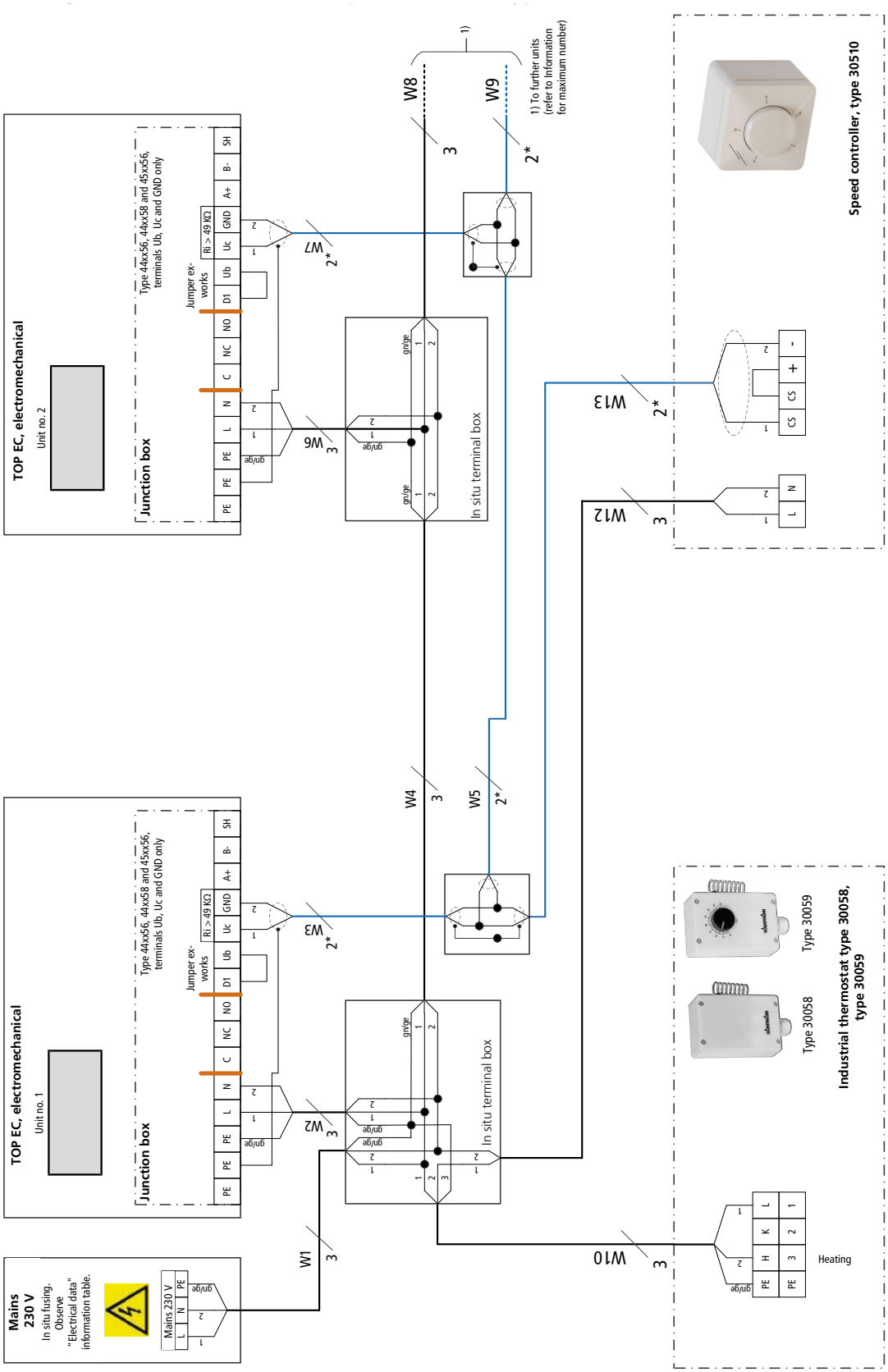

Cabling of TOP (**00), actuation by speed controller type 30510 with room thermostat type 30055

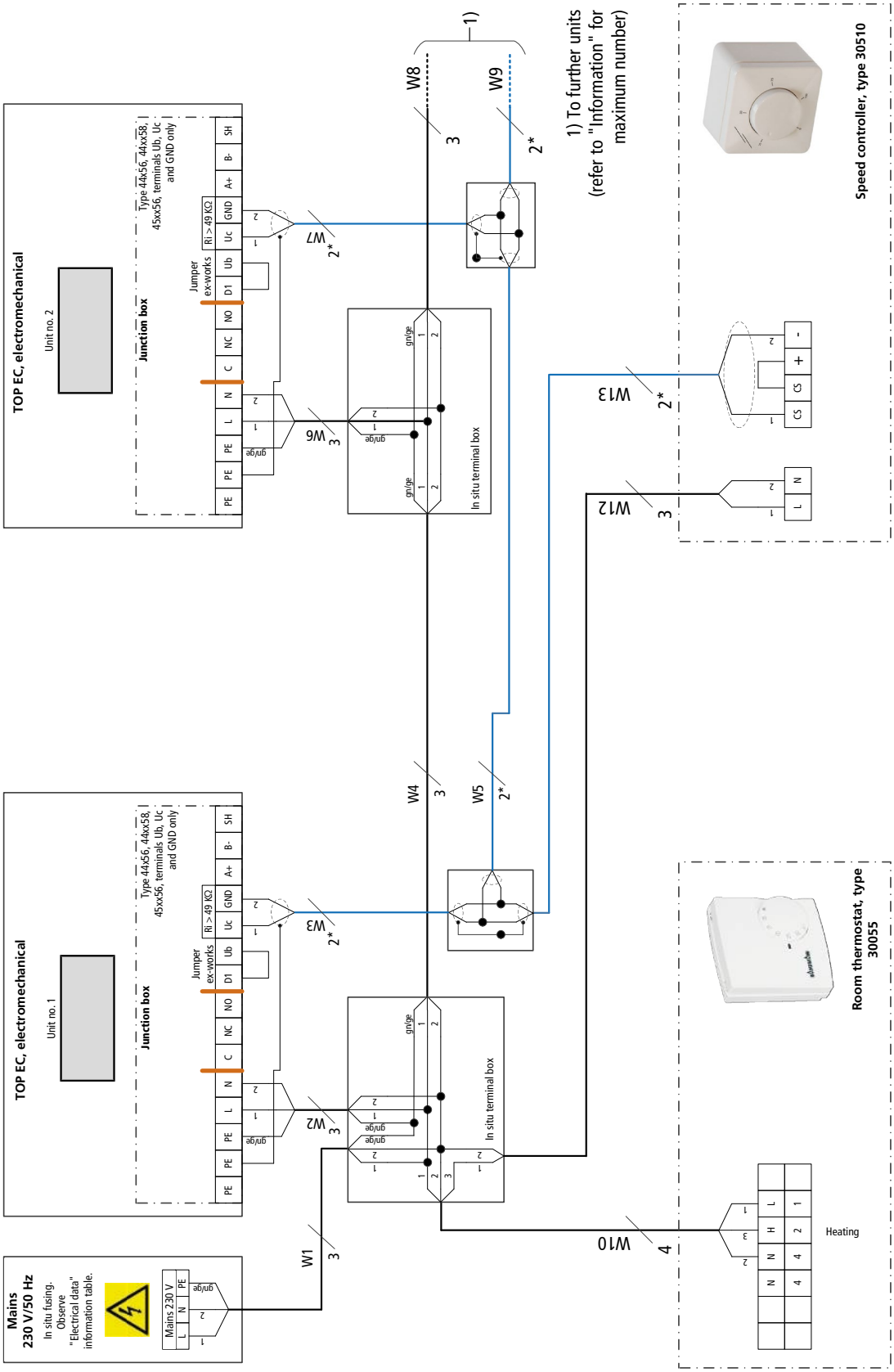

Cabling of TOP(**00), actuation by speed controller type 30510 with clock thermostat type 30056

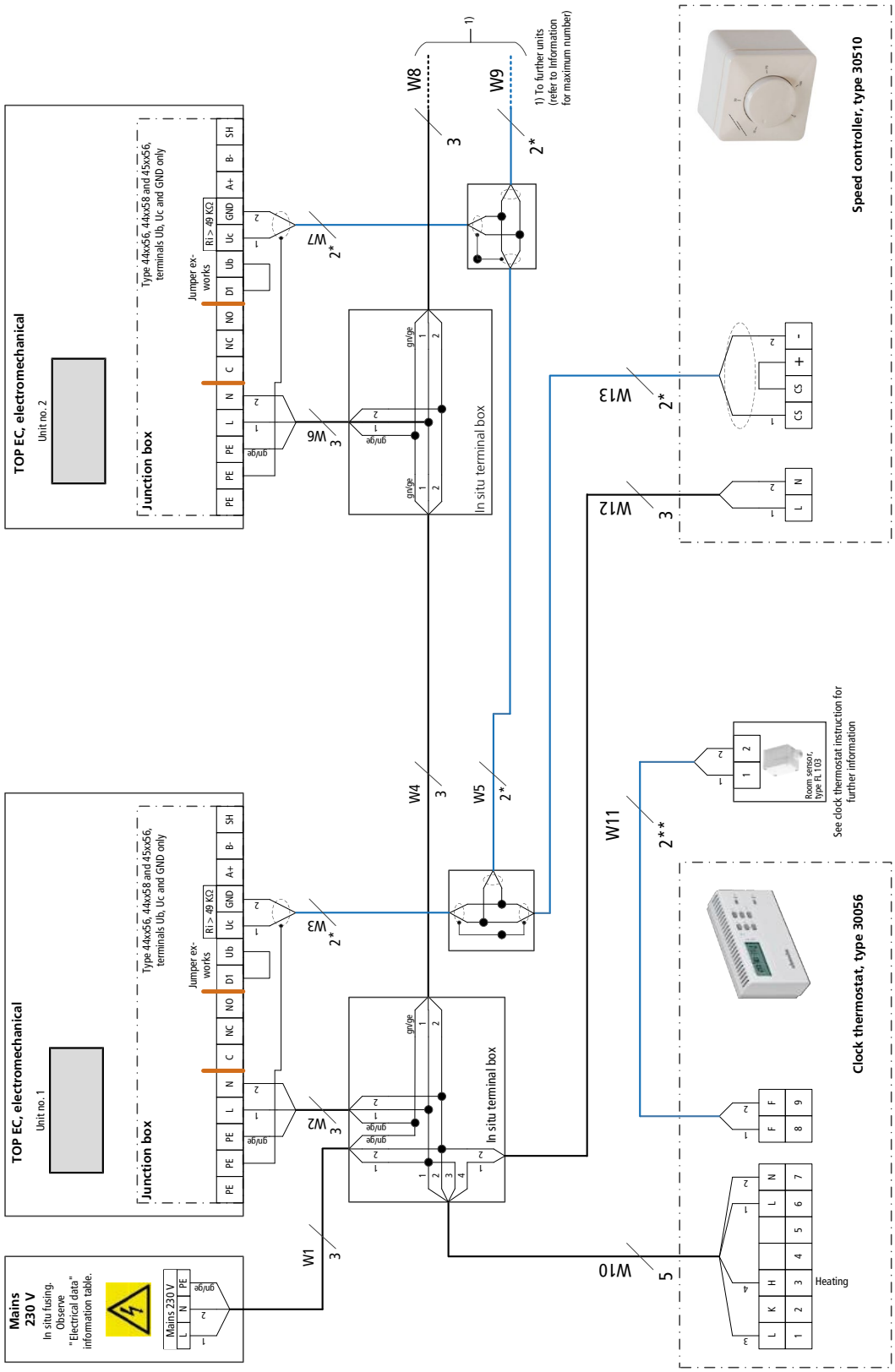

Cabling of TOP (**00), actuation by climate controller type 30155, 2-pipe valve actuator 230 V AC, Open/Close

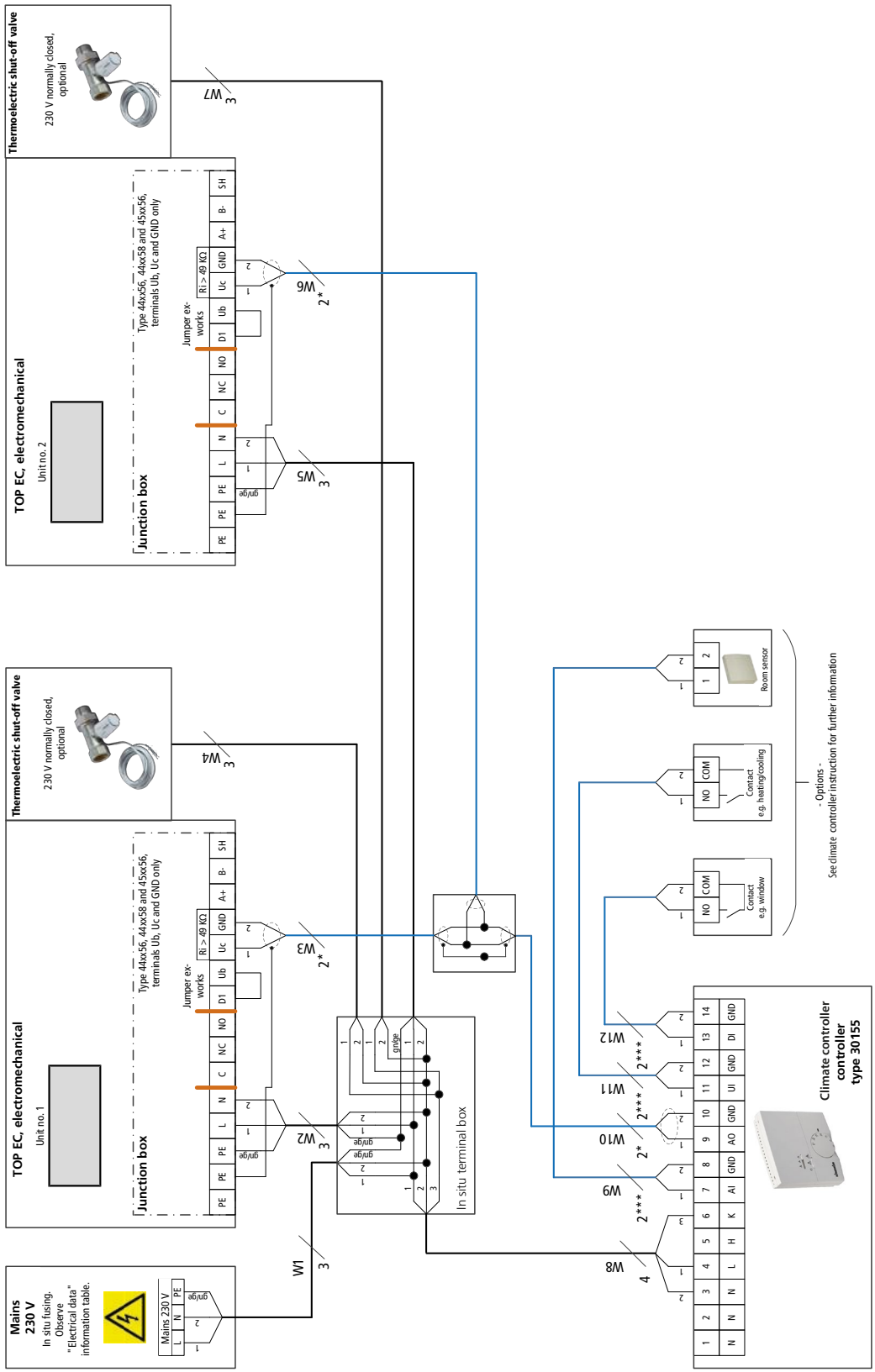

Cabling of TOP (**00), actuation by climate controller type 30256, 2-pipe valve actuator 230 V AC, Open/Close

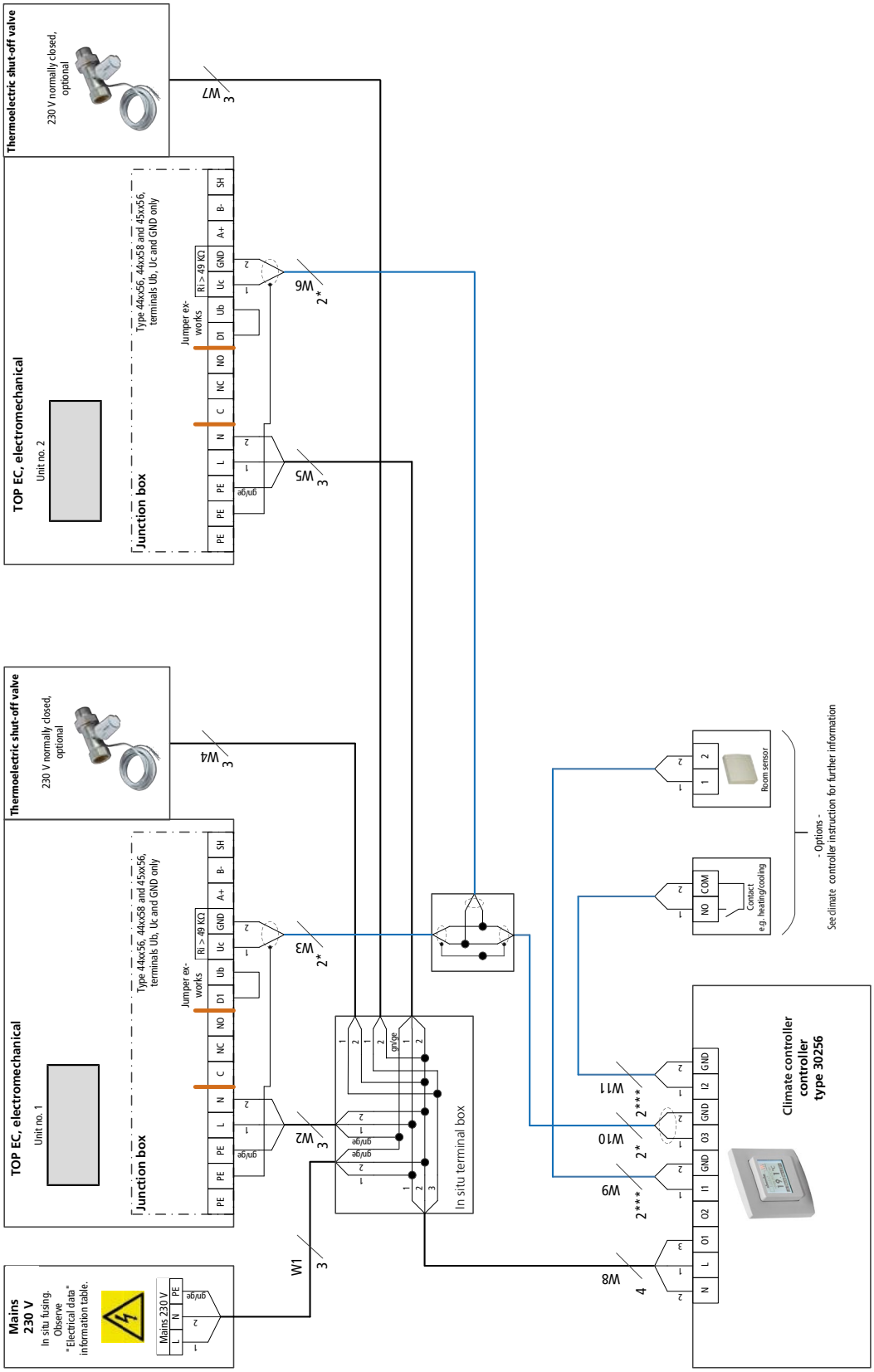

Cabling of TOP (*00), actuation by speed controller type 30515

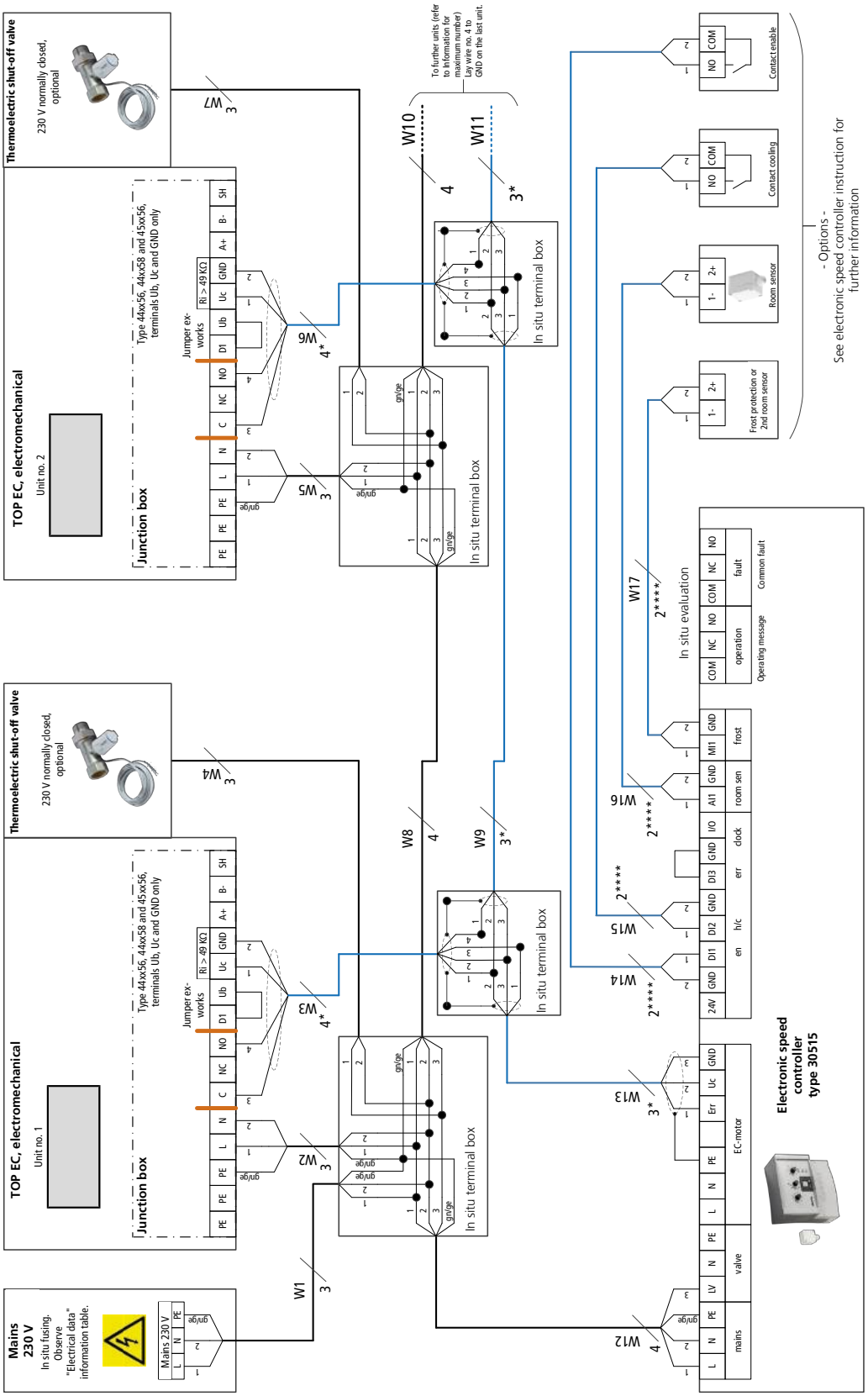

Cabling of TOP (**00), actuation by DDC/BMS, 2-pipe valve actuator 230 V AC, Open/Close

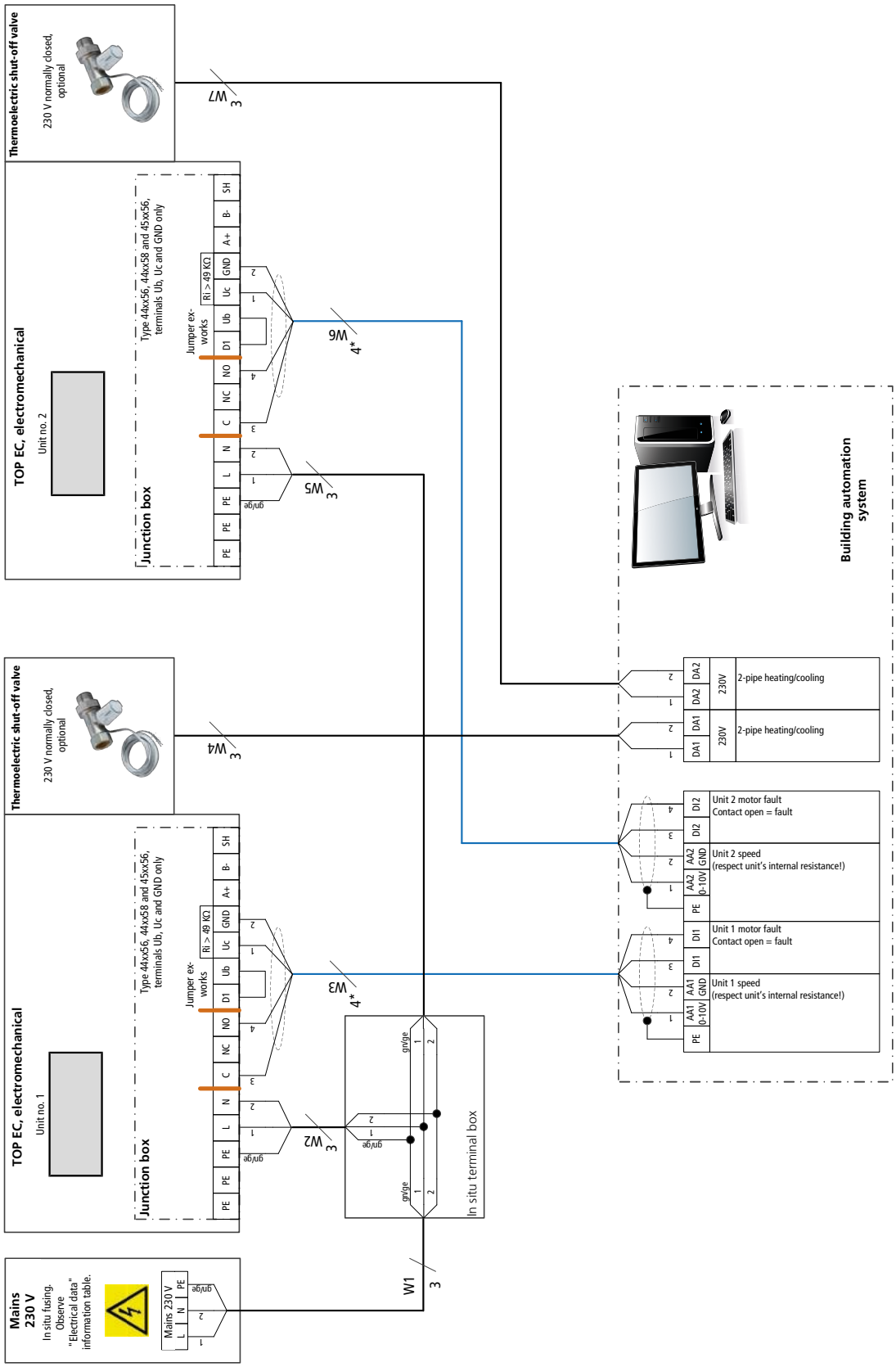

Control of TOP – KaControl model

The all-inclusive solution!

Product features

Units configured for operation with KaControl are fully wired and fitted with all electrical parts ready for connection (with the exception of optional accessories). The built-in, high-performance, parametrisable KaControl microprocessor control provides all the functions the TOP needs.
The "face" of the KaControl is the KaController operating unit. A group of up to two units can be formed using a KaController unit without the need for additional addressing.
Optional plug-in interface cards offer the option of connecting to higher-level control systems.

Fans

The speed of the EC fans used in the units is controlled by a 0-10 V DC signal from the KaControl. The "intelligent" motor electronics detects any possible motor fault and automatically switches the fan off. A motor fault on the unit to which the KaController is connected is displayed on the KaController.

Control unit

Various versions of KaController operating unit are available for operation and control.

KaController

The KaController offers maximum operating convenience with a large display, one-touch operation and optionally also with side operating keys for quick access. Based on the principle of "as little as possible, as much as required", even untrained users can intuitively get to grips with the control options.

The displays are language-independent using pictograms. The basic functions are inputted in a user-friendly way using the KaController.

Type 196003214002

Type 196003210001

Type 196003210002

Type 196003210006

Product features of the KaController

- Plastic housing, colour similar to RAL 9010 (type 196003210001 and 196003210002) or black (type 196003210006) for surface-mounting on a flush back box or surface-mounting with a surface-mounted frame (accessory)
- high-quality design of room control units, large LCD multifunctional display with energy-saving, automatically switching LED backlight
- push-turn navigator dial with endless turn/lock function
- side function keys for quick access (only with type 196003210002)
- integral temperature sensor
  Important! The model in an industrial housing always needs a separate room temperature sensor
- individually adjustable basic display
- display of fault messages
- built-in weekly switching program
- password-protected parameter level

KaControl

The parametrisable KaControl microprocessor control offers a wealth of functions. The following default functions are factory-set for the TOP product:

- 2-pipe applications, thermal valve actuators 24 V AC Open/Close, normally closed
- room temperature control with 2-point valve control and demand-led fan control in automatic mode or optionally fixed stage selection
- optional use of the internal or external room temperature sensor (accessory)
- in the event of an alarm being triggered on a device to which the KaController room control unit is connected, e.g. a motor fault is detected by the KaControl and indicated on the KaController control unit
- control input heating/cooling changeover with 2-pipe systems
- control input can either be set to Comfort/ECO or ON/OFF changeover
- switching output 24 V DC/max. 0.5 A parametrisable to unit alarm, heat or cooling demand (only with 2-pipe applications)
- sequential valve actuation (Open/Close) and fan speed via a data point
- 0-10 V DC only with actuation without KaController
- one slot for optional interface cards for connection to a higher-level building automation system – optionally Modbus, KNX, BACnet (accessory)
- password-protected parameter level
- parallel operation of a maximum of 2 units is possible, extendible to a maximum of 30 units using an additional CANbus card type 3260301 (accessory) per unit

Any additional functions required can be parametrised and correspondingly coordinated.

Cabling

The following points need to be taken into account with the cabling and wiring diagrams below:

- Comply with the details on type of cable and cabling taking into consideration DE 0100.
- None *: NYM-J. The requisite number of wires, including protective conductor, is stated on the cable. Cross-sections are not stated, as the cable length is involved in the calculation of the cross-section.
- With *: J-Y(ST)Y 0.8 mm. Lay separately from power lines.
- With **: UNITRONIC BUS LD 0.22 mm². Lay separately from power lines.
- If other types of cables are used, they must be at least equivalent.
- Length of BUS cable from the KaController to unit 1: max. 30 m.
- Maximum number of parallel units: 2 units. Maximum 30 units with a CANbus card type 3260301 (see accessories) required for each unit and a terminal resistor on the 1st and last unit.
- Length of BUS cable from unit 1 to unit 2 max. 30 m. Max. 500 m with a CANbus card type 3260301 (see accessories) needed for each unit.
- Length of cable for room sensor and switching contact maximum 30 m, maximum 100 m from 1 mm².
- The terminals on the unit for the mains power supply are suitable for a maximum wire cross-section of 2.5 mm².
- Any RCCBs used must be pulsating current-sensitive (type A). When the power supply to the unit is switched on, pulsating charging currents from the capacitors in the integral EMC filter can cause FI cut-outs to trip. We recommend the use of RCCBs with a tripping threshold of 300 mA.
- The electrical data listed in the following table needs to be considered when configuring the on-site mains supply and fuses.

Electrical data for TOP, KaControl model

Unit heater type	Nominal voltage [V]	Mains frequency [Hz]	Active power [kW]	Nominal current [A]	Leakage current [mA]	Max. fuse [A]	IP protection rating	Protection class
44xx56C1	230	50/60	0.14	1.27	< 3.5	B10	54	I
44xx58C1	230	50/60	0.17	1.46	< 3.5	B10	54	I
45xx56C1	230	50/60	0.17	1.51	< 3.5	B10	54	I
45xx58C1	230	50/60	0.39	1.74	< 3.5	C16	54	I
46xx58C1	230	50/60	0.46	2.13	< 3.5	C16	54	I
47xx56C1	230	50/60	0.37	1.69	< 3.5	C16	54	I
47xx58C1	230	50/60	0.85	3.83	< 3.5	C16	54	I

Electrical data without KaControl and valve actuator
xx Heat exchanger model

Cabling of TOP (*C1), actuation by KaController type 321000x, 2-pipe, 24 V DC valve, Open/Close

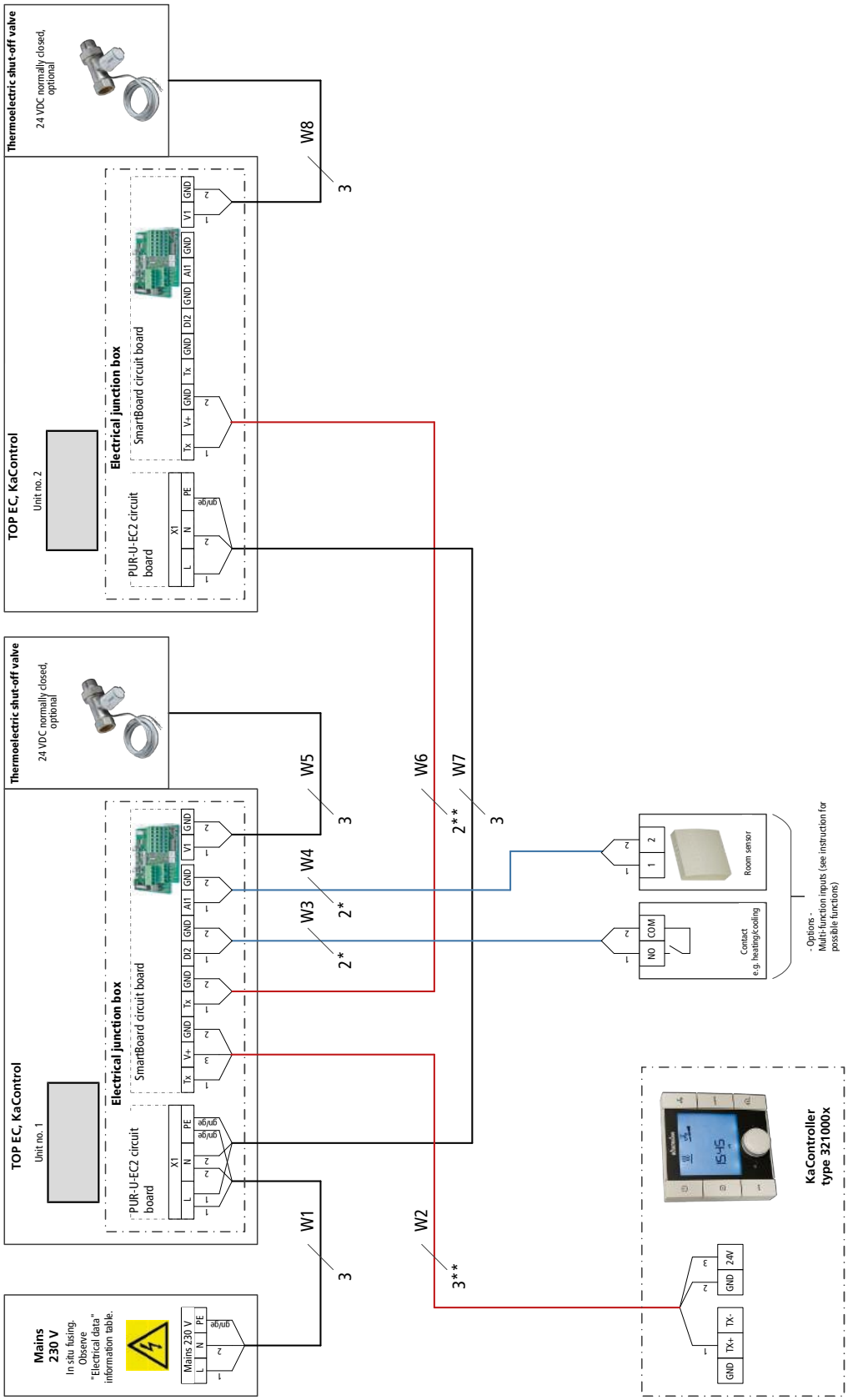

Cabling of TOP (*C1), actuation by a 0-10 V DC signal on site

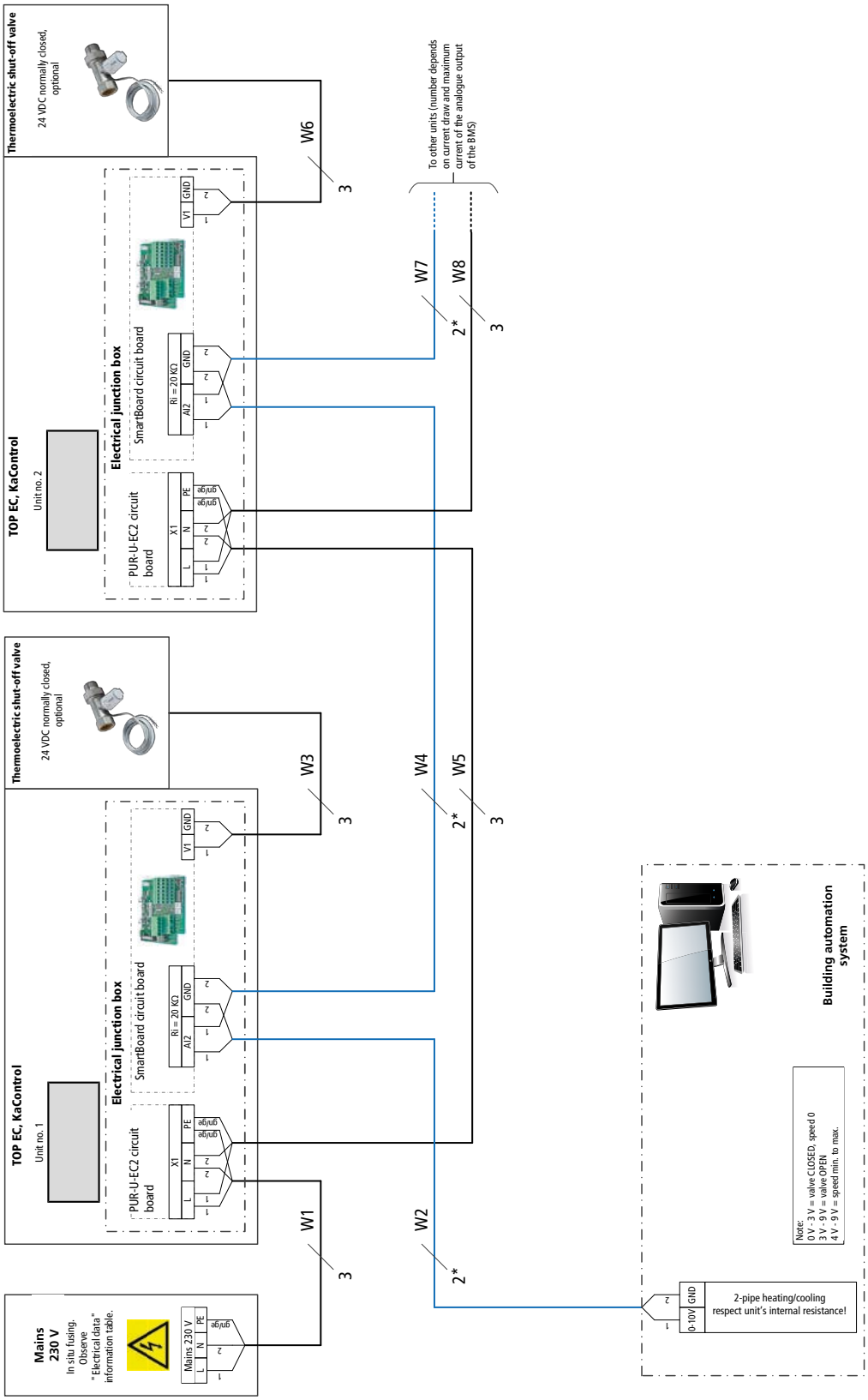

Ceiling fan

Cabling

The following points need to be taken into account with the cabling and wiring diagrams below:

- Comply with the details on type of cable and cabling taking into consideration VDE 0100.
- None *: NYM-J. The requisite number of wires, including protective conductor, is stated on the cable. Cross-sections are not stated, as the cable length is involved in the calculation of the cross-section.
- With *: Sensor connection cable 0.75 mm²
  e.g. J-Y(ST)Y, 2 x 2 x 0.8 mm, max. 45 m cable length, lay separately from power lines!
- If other types of cables are used, they must be at least equivalent.
- The terminals on the fan are suitable for a maximum wire cross-section of 2.5 mm².
- Switching capacity of the warm air return control max. 4 A.

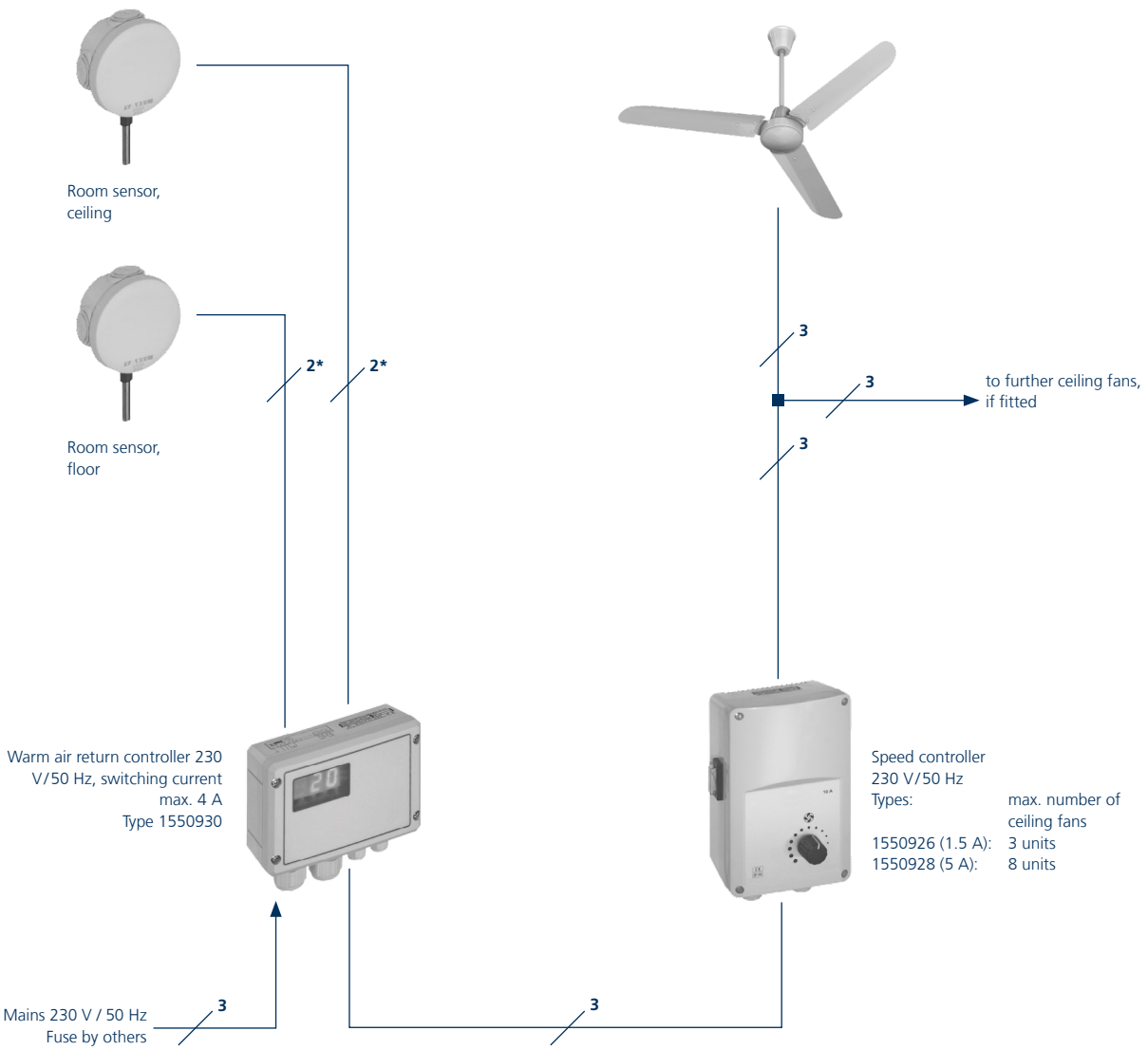

05 Ordering information

TOP

Fan version	Nominal fan speed	Length	Width	Height	Heat exchanger model	Heat exchanger performance	Control option	Article no.
	[1/min]	[mm]	[mm]	[mm]				
model size 4								
EC fan, 230 V, high speed	525 – 1520	320	540	500	copper/ aluminium	low, heat exchanger code no. 20	electromechanical	**153000442058**
							electromechanical with frost protection thermostat	**153000442058F0**
							electromechanical with repair switch	**1530004420580R**
							KaControl	**153000442058C1**
							frost protection thermostat and repair switch	**153000442058FR**
						medium, heat exchanger code no. 30	electromechanical	**153000443058**
							electromechanical with frost protection thermostat	**153000443058F0**
							electromechanical with repair switch	**1530004430580R**
							KaControl	**153000443058C1**
							frost protection thermostat and repair switch	**153000443058FR**
						high, heat exchanger code no. 40	electromechanical	**153000444058**
							electromechanical with frost protection thermostat	**153000444058F0**
							electromechanical with repair switch	**1530004440580R**
							KaControl	**153000444058C1**
							frost protection thermostat and repair switch	**153000444058FR**
					steel, galvanised	low, heat exchanger code no. 21	electromechanical	**153000442158**
							electromechanical with frost protection thermostat	**153000442158F0**
							electromechanical with repair switch	**1530004421580R**
							KaControl	**153000442158C1**
							frost protection thermostat and repair switch	**153000442158FR**
						medium, heat exchanger code no. 31	electromechanical	**153000443158**
							electromechanical with frost protection thermostat	**153000443158F0**
							electromechanical with repair switch	**1530004431580R**
							KaControl	**153000443158C1**
							frost protection thermostat and repair switch	**153000443158FR**
						high, heat exchanger code no. 41	electromechanical	**153000444158**
							electromechanical with frost protection thermostat	**153000444158F0**
							electromechanical with repair switch	**1530004441580R**
							KaControl	**153000444158C1**
							frost protection thermostat and repair switch	**153000444158FR**
					steel, galvanised cross-counterflow	medium, heat exchanger code no. 33	electromechanical	**153000443358**
							electromechanical with frost protection thermostat	**153000443358F0**
							electromechanical with repair switch	**1530004433580R**
							KaControl	**153000443358C1**
							frost protection thermostat and repair switch	**153000443358FR**
						high, heat exchanger code no. 43	electromechanical	**153000444358**
							electromechanical with frost protection thermostat	**153000444358F0**
							electromechanical with repair switch	**1530004443580R**
							KaControl	**153000444358C1**
							frost protection thermostat and repair switch	**153000444358FR**

CONTINUED

TOP

Fan version	Nominal fan speed	Length	Width	Height	Heat exchanger model	Heat exchanger performance	Control option	Article no.
	[1/min]	[mm]	[mm]	[mm]				
EC fan, 230 V, reduced speed	480 – 1410	320	540	500	copper/ aluminium	low, heat exchanger code no. 20	electromechanical	153000442056
							electromechanical with frost protection thermostat	153000442056F0
							electromechanical with repair switch	1530004420560R
							KaControl	153000442056C1
							frost protection thermostat and repair switch	153000442056FR
						medium, heat exchanger code no. 30	electromechanical	153000443056
							electromechanical with frost protection thermostat	153000443056F0
							electromechanical with repair switch	1530004430560R
							KaControl	153000443056C1
							frost protection thermostat and repair switch	153000443056FR
						high, heat exchanger code no. 40	electromechanical	153000444056
							electromechanical with frost protection thermostat	153000444056F0
							electromechanical with repair switch	1530004440560R
							KaControl	153000444056C1
							frost protection thermostat and repair switch	153000444056FR
					steel, galvanised	low, heat exchanger code no. 21	electromechanical	153000442156
							electromechanical with frost protection thermostat	153000442156F0
							electromechanical with repair switch	1530004421560R
							KaControl	153000442156C1
							frost protection thermostat and repair switch	153000442156FR
						medium, heat exchanger code no. 31	electromechanical	153000443156
							electromechanical with frost protection thermostat	153000443156F0
							electromechanical with repair switch	1530004431560R
							KaControl	153000443156C1
							frost protection thermostat and repair switch	153000443156FR
						high, heat exchanger code no. 41	electromechanical	153000444156
							electromechanical with frost protection thermostat	153000444156F0
							electromechanical with repair switch	1530004441560R
							KaControl	153000444156C1
							frost protection thermostat and repair switch	153000444156FR
					steel, galvanised cross-counterflow	medium, heat exchanger code no. 33	electromechanical	153000443356
							electromechanical with frost protection thermostat	153000443356F0
							electromechanical with repair switch	1530004433560R
							KaControl	153000443356C1
							frost protection thermostat and repair switch	153000443356FR
						high, heat exchanger code no. 43	electromechanical	153000444356
							electromechanical with frost protection thermostat	153000444356F0
							electromechanical with repair switch	1530004443560R
							KaControl	153000444356C1
							frost protection thermostat and repair switch	153000444356FR

CONTINUED

TOP

Fan version	Nominal fan speed	Length	Width	Height	Heat exchanger model	Heat exchanger performance	Control option	Article no.
	[1/min]	[mm]	[mm]	[mm]				
model size 5								
EC fan, 230 V, high speed	235 – 1470	320	640	600	copper/ aluminium	low, heat exchanger code no. 20	electromechanical	**153000452058**
							electromechanical with frost protection thermostat	**153000452058F0**
							electromechanical with repair switch	**1530004520580R**
							KaControl	**153000452058C1**
							frost protection thermostat and repair switch	**153000452058FR**
						medium, heat exchanger code no. 30	electromechanical	**153000453058**
							electromechanical with frost protection thermostat	**153000453058F0**
							electromechanical with repair switch	**1530004530580R**
							KaControl	**153000453058C1**
							frost protection thermostat and repair switch	**153000453058FR**
						high, heat exchanger code no. 40	electromechanical	**153000454058**
							electromechanical with frost protection thermostat	**153000454058F0**
							electromechanical with repair switch	**1530004540580R**
							KaControl	**153000454058C1**
							frost protection thermostat and repair switch	**153000454058FR**
					steel, galvanised	low, heat exchanger code no. 21	electromechanical	**153000452158**
							electromechanical with frost protection thermostat	**153000452158F0**
							electromechanical with repair switch	**1530004521580R**
							KaControl	**153000452158C1**
							frost protection thermostat and repair switch	**153000452158FR**
						medium, heat exchanger code no. 31	electromechanical	**153000453158**
							electromechanical with frost protection thermostat	**153000453158F0**
							electromechanical with repair switch	**1530004531580R**
							KaControl	**153000453158C1**
							frost protection thermostat and repair switch	**153000453158FR**
						high, heat exchanger code no. 41	electromechanical	**153000454158**
							electromechanical with frost protection thermostat	**153000454158F0**
							electromechanical with repair switch	**1530004541580R**
							KaControl	**153000454158C1**
							frost protection thermostat and repair switch	**153000454158FR**
					steel, galvanised cross-counterflow	medium, heat exchanger code no. 33	electromechanical	**153000453358**
							electromechanical with frost protection thermostat	**153000453358F0**
							electromechanical with repair switch	**1530004533580R**
							KaControl	**153000453358C1**
							frost protection thermostat and repair switch	**153000453358FR**
						high, heat exchanger code no. 43	electromechanical	**153000454358**
							electromechanical with frost protection thermostat	**153000454358F0**
							electromechanical with repair switch	**1530004543580R**
							KaControl	**153000454358C1**
							frost protection thermostat and repair switch	**153000454358FR**

CONTINUED

TOP

Fan version	Nominal fan speed	Length	Width	Height	Heat exchanger model	Heat exchanger performance	Control option	Article no.
	[1/min]	[mm]	[mm]	[mm]				
EC fan, 230 V, reduced speed	380 – 1080	320	640	600	copper/ aluminium	low, heat exchanger code no. 20	electromechanical	153000452056
							electromechanical with frost protection thermostat	153000452056F0
							electromechanical with repair switch	1530004520560R
							KaControl	153000452056C1
							frost protection thermostat and repair switch	153000452056FR
						medium, heat exchanger code no. 30	electromechanical	153000453056
							electromechanical with frost protection thermostat	153000453056F0
							electromechanical with repair switch	1530004530560R
							KaControl	153000453056C1
							frost protection thermostat and repair switch	153000453056FR
						high, heat exchanger code no. 40	electromechanical	153000454056
							electromechanical with frost protection thermostat	153000454056F0
							electromechanical with repair switch	1530004540560R
							KaControl	153000454056C1
							frost protection thermostat and repair switch	153000454056FR
					steel, galvanised	low, heat exchanger code no. 21	electromechanical	153000452156
							electromechanical with frost protection thermostat	153000452156F0
							electromechanical with repair switch	1530004521560R
							KaControl	153000452156C1
							frost protection thermostat and repair switch	153000452156FR
						medium, heat exchanger code no. 31	electromechanical	153000453156
							electromechanical with frost protection thermostat	153000453156F0
							electromechanical with repair switch	1530004531560R
							KaControl	153000453156C1
							frost protection thermostat and repair switch	153000453156FR
						high, heat exchanger code no. 41	electromechanical	153000454156
							electromechanical with frost protection thermostat	153000454156F0
							electromechanical with repair switch	1530004541560R
							KaControl	153000454156C1
							frost protection thermostat and repair switch	153000454156FR
					steel, galvanised cross-counterflow	medium, heat exchanger code no. 33	electromechanical	153000453356
							electromechanical with frost protection thermostat	153000453356F0
							electromechanical with repair switch	1530004533560R
							KaControl	153000453356C1
							frost protection thermostat and repair switch	153000453356FR
						high, heat exchanger code no. 43	electromechanical	153000454356
							electromechanical with frost protection thermostat	153000454356F0
							electromechanical with repair switch	1530004543560R
							KaControl	153000454356C1
							frost protection thermostat and repair switch	153000454356FR

CONTINUED

TOP

Fan version	Nominal fan speed	Length	Width	Height	Heat exchanger model	Heat exchanger performance	Control option	Article no.
	[1/min]	[mm]	[mm]	[mm]				
model size 6								
EC fan, 230 V, high speed	160 – 990	320	740	700	copper/ aluminium	low, heat exchanger code no. 20	electromechanical	**153000462058**
							electromechanical with frost protection thermostat	**153000462058F0**
							electromechanical with repair switch	**1530004620580R**
							KaControl	**153000462058C1**
							frost protection thermostat and repair switch	**153000462058FR**
						medium, heat exchanger code no. 30	electromechanical	**153000463058**
							electromechanical with frost protection thermostat	**153000463058F0**
							electromechanical with repair switch	**1530004630580R**
							KaControl	**153000463058C1**
							frost protection thermostat and repair switch	**153000463058FR**
						high, heat exchanger code no. 40	electromechanical	**153000464058**
							electromechanical with frost protection thermostat	**153000464058F0**
							electromechanical with repair switch	**1530004640580R**
							KaControl	**153000464058C1**
							frost protection thermostat and repair switch	**153000464058FR**
					steel, galvanised	low, heat exchanger code no. 21	electromechanical	**153000462158**
							electromechanical with frost protection thermostat	**153000462158F0**
							electromechanical with repair switch	**1530004621580R**
							KaControl	**153000462158C1**
							frost protection thermostat and repair switch	**153000462158FR**
						medium, heat exchanger code no. 31	electromechanical	**153000463158**
							electromechanical with frost protection thermostat	**153000463158F0**
							electromechanical with repair switch	**1530004631580R**
							KaControl	**153000463158C1**
							frost protection thermostat and repair switch	**153000463158FR**
						high, heat exchanger code no. 41	electromechanical	**153000464158**
							electromechanical with frost protection thermostat	**153000464158F0**
							electromechanical with repair switch	**1530004641580R**
							KaControl	**153000464158C1**
							frost protection thermostat and repair switch	**153000464158FR**
					steel, galvanised cross-counterflow	medium, heat exchanger code no. 33	electromechanical	**153000463358**
							electromechanical with frost protection thermostat	**153000463358F0**
							electromechanical with repair switch	**1530004633580R**
							KaControl	**153000463358C1**
							frost protection thermostat and repair switch	**153000463358FR**
						high, heat exchanger code no. 43	electromechanical	**153000464358**
							electromechanical with frost protection thermostat	**153000464358F0**
							electromechanical with repair switch	**1530004643580R**
							KaControl	**153000464358C1**
							frost protection thermostat and repair switch	**153000464358FR**

CONTINUED

TOP

Fan version	Nominal fan speed	Length	Width	Height	Heat exchanger model	Heat exchanger performance	Control option	Article no.
	[1/min]	[mm]	[mm]	[mm]				
model size 7								
EC fan, 230 V, high speed	170 – 1000	360	840	800	copper/ aluminium	low, heat exchanger code no. 20	electromechanical	**153000472058**
							electromechanical with frost protection thermostat	**153000472058F0**
							electromechanical with repair switch	**1530004720580R**
							KaControl	**153000472058C1**
							frost protection thermostat and repair switch	**153000472058FR**
						medium, heat exchanger code no. 30	electromechanical	**153000473058**
							electromechanical with frost protection thermostat	**153000473058F0**
							electromechanical with repair switch	**1530004730580R**
							KaControl	**153000473058C1**
							frost protection thermostat and repair switch	**153000473058FR**
						high, heat exchanger code no. 40	electromechanical	**153000474058**
							electromechanical with frost protection thermostat	**153000474058F0**
							electromechanical with repair switch	**1530004740580R**
							KaControl	**153000474058C1**
							frost protection thermostat and repair switch	**153000474058FR**
					steel, galvanised	low, heat exchanger code no. 21	electromechanical	**153000472158**
							electromechanical with frost protection thermostat	**153000472158F0**
							electromechanical with repair switch	**1530004721580R**
							KaControl	**153000472158C1**
							frost protection thermostat and repair switch	**153000472158FR**
						medium, heat exchanger code no. 31	electromechanical	**153000473158**
							electromechanical with frost protection thermostat	**153000473158F0**
							electromechanical with repair switch	**1530004731580R**
							KaControl	**153000473158C1**
							frost protection thermostat and repair switch	**153000473158FR**
						high, heat exchanger code no. 41	electromechanical	**153000474158**
							electromechanical with frost protection thermostat	**153000474158F0**
							electromechanical with repair switch	**1530004741580R**
							KaControl	**153000474158C1**
							frost protection thermostat and repair switch	**153000474158FR**
					steel, galvanised cross-counterflow	medium, heat exchanger code no. 33	electromechanical	**153000473358**
							electromechanical with frost protection thermostat	**153000473358F0**
							electromechanical with repair switch	**1530004733580R**
							KaControl	**153000473358C1**
							frost protection thermostat and repair switch	**153000473358FR**
						high, heat exchanger code no. 43	electromechanical	**153000474358**
							electromechanical with frost protection thermostat	**153000474358F0**
							electromechanical with repair switch	**1530004743580R**
							KaControl	**153000474358C1**
							frost protection thermostat and repair switch	**153000474358FR**

CONTINUED

TOP

Fan version	Nominal fan speed	Length	Width	Height	Heat exchanger model	Heat exchanger performance	Control option	Article no.
	[1/min]	[mm]	[mm]	[mm]				
EC fan, 230 V, reduced speed	145 – 780	360	840	800	copper/ aluminium	low, heat exchanger code no. 20	electromechanical	153000472056
							electromechanical with frost protection thermostat	153000472056F0
							electromechanical with repair switch	1530004720560R
							KaControl	153000472056C1
							frost protection thermostat and repair switch	153000472056FR
						medium, heat exchanger code no. 30	electromechanical	153000473056
							electromechanical with frost protection thermostat	153000473056F0
							electromechanical with repair switch	1530004730560R
							KaControl	153000473056C1
							frost protection thermostat and repair switch	153000473056FR
						high, heat exchanger code no. 40	electromechanical	153000474056
							electromechanical with frost protection thermostat	153000474056F0
							electromechanical with repair switch	1530004740560R
							KaControl	153000474056C1
							frost protection thermostat and repair switch	153000474056FR
					steel, galvanised	low, heat exchanger code no. 21	electromechanical	153000472156
							electromechanical with frost protection thermostat	153000472156F0
							electromechanical with repair switch	1530004721560R
							KaControl	153000472156C1
							frost protection thermostat and repair switch	153000472156FR
						medium, heat exchanger code no. 31	electromechanical	153000473156
							electromechanical with frost protection thermostat	153000473156F0
							electromechanical with repair switch	1530004731560R
							KaControl	153000473156C1
							frost protection thermostat and repair switch	153000473156FR
						high, heat exchanger code no. 41	electromechanical	153000474156
							electromechanical with frost protection thermostat	153000474156F0
							electromechanical with repair switch	1530004741560R
							KaControl	153000474156C1
							frost protection thermostat and repair switch	153000474156FR
					steel, galvanised cross-counterflow	medium, heat exchanger code no. 33	electromechanical	153000473356
							electromechanical with frost protection thermostat	153000473356F0
							electromechanical with repair switch	1530004733560R
							KaControl	153000473356C1
							frost protection thermostat and repair switch	153000473356FR
						high, heat exchanger code no. 43	electromechanical	153000474356
							electromechanical with frost protection thermostat	153000474356F0
							electromechanical with repair switch	1530004743560R
							KaControl	153000474356C1
							frost protection thermostat and repair switch	153000474356FR

CONTINUED

TOP

Fan version	Nominal fan speed	Length	Width	Height	Heat exchanger model	Heat exchanger performance	Control option	Article no.
	[1/min]	[mm]	[mm]	[mm]				
model size 8								
EC fan, 230 V, high speed	150 – 895	670	940	900	copper/ aluminium	low, heat exchanger code no. 20	electromechanical	**153000482068**
							electromechanical with repair switch	**1530004820680R**
							KaControl	**153000482068C1**
						medium, heat exchanger code no. 30	electromechanical	**153000483068**
							electromechanical with repair switch	**1530004830680R**
							KaControl	**153000483068C1**
						high, heat exchanger code no. 40	electromechanical	**153000484068**
							electromechanical with repair switch	**1530004840680R**
							KaControl	**153000484068C1**
					steel, galvanised	low, heat exchanger code no. 21	electromechanical	**153000482168**
							electromechanical with repair switch	**1530004821680R**
							KaControl	**153000482168C1**
						medium, heat exchanger code no. 31	electromechanical	**153000483168**
							electromechanical with repair switch	**1530004831680R**
							KaControl	**153000483168C1**
						high, heat exchanger code no. 41	electromechanical	**153000484168**
							electromechanical with repair switch	**1530004841680R**
							KaControl	**153000484168C1**

Accessories

Article	Article	Properties	Dimensions	Suitable for	Article no.
			[mm]		
Control accessories KaControl					
	KaController	with single-button operation, 24 V, colour similar to RAL 9010 pure white wall-mounted room control unit, with integral room temperature sensor	60 x 52 x 86	all units with control option KaControl -C1	**196003210001**
	KaController	with single-button operation, 24 V, colour similar to RAL 9017 traffic black wall-mounted room control unit, with integral room temperature sensor	60 x 52 x 86	all units with control option KaControl -C1	**196003210006**
	KaController	with side operating keys, 24 V, colour similar to RAL 9010 pure white wall-mounted room control unit, with integral room temperature sensor	86 x 53 x 86	all units with control option KaControl -C1 and all ProtecTor door air curtain with KaControl electronics	**196003210002**
	Industry KaController	with side operating keys, surface-mounted, protection rating IP 65 industrial housing with hinged transparent cover, lockable	200 x 110 x 195	all units with control option KaControl -C1 and all ProtecTor door air curtain with KaControl electronics	**196003214002**
	Room temperature sensor	wall-mounted, surface mounted, protection class IP30, white RAL 9010	85 x 25 x 85	all units with KaControl -C1 and climate controller art. no. 196000148941, 196000148942, 196000148943 and 196000148944	**196003250110**
	Outside temperature sensor/industrial temperature sensor	protection class IP 65, white, similar to RAL 9010	63 x 68 x 57	all units with control option KaControl -C1 and all ProtecTor door air curtain with KaControl electronics	**196003250112**
	Clip-on pipe sensor	to detect the medium temperature, heating/ cooling changeover function only in conjunction with 3-way valve! includes retaining strap, cable length 3 m	5 x 6 x 3000	all units with control option KaControl -C1	**196003250115**
	Serial KNX card	for integration into a KNX/ EIB network, interface PCOS00KXN0	35 x 20 x 80	all units with KaControl configuration -C1	**196003260702**

CONTINUED

Accessories

Article	Article	Properties	Dimensions	Suitable for	Article no.
			[mm]		
Control accessories electro-mechanical 230 V					
	Room thermostat	surface-mounted, 3-stage, only in conjunction with valves/valve kits with 230 V actuator Open/Close 230 V, EC, heating/cooling in a 2 and 4-pipe, with OFF/Manual/Automatic fan changeover	110 x 111 x 26	EC units electromechanical 5 no. Katherm HK trench heaters 2 TOP or Ultra unit heaters 2 Venkons, KaCool D AF or KaCool W fan coils	**196000030155**
	Clock thermostat	flush-mounted, continuously variable, with LCD operating menu and integrated timer program 230 V, EC, heating/cooling for 2- and 4-pipe	85 x 46 x 81	EC units electromechanical 2 units	**196000030256**
	Speed controller	continuously variable fan operation, 0-100% presettable 230 V, EC, On/Off via room thermostat, DC 0-10 V, surface-mounted, protection class IP 54, flush-mounted, protection class IP 44	82 x 82 x 68	EC units electromechanical 2 ProtecTor, 5 UniLine or Tandem air curtains 10 TOP or Ultra unit heaters 10 Venkons, 2 KaCool D AF or KaCool W fan coils	**196000030510**
	Electronic speed controller	with integrated digital timer, degree of protection IP 40 230 V, EC, with day, night, week programme, continuously variable fan operation 0 to 100 %, optionally manual or automatic, 0-10 VDC, recirculating air, including sensor	262 x 277 x 153	EC units electromechanical 10 TOP, TIP or Ultra unit heaters 10 Venkon fan coils 2 KaCool D AF or KaCool W fan coils	**196000030515**

CONTINUED

Accessories

Article	Article	Properties	Dimensions	Suitable for	Article no.
			[mm]		
Thermostats					
	Room thermostat	with thermal feedback, 230 V AC, surface-mounted protection class IP 30	78 x 28 x 83	all unit heaters and Galaxis radiant ceiling panels	**196000030055**
	Industrial thermostat	with setpoint adjustment by tool protection class IP 54	113 x 71 x 158	all unit heaters, ProtecTor air curtains und Galaxis radiant ceiling paneels	**196000030058**
	Industrial thermostat	with setpoint adjustment using a dial protection class IP 54	113 x 71 x 158	all unit heaters, ProtecTor air curtains und Galaxis radiant ceiling paneels	**196000030059**
	Clock thermostat	with integral digital timer with day/night/week programme, with night setback, protection class IP 20	84 x 33 x 133	all unit heaters and Galaxis radiant ceiling panels	**196000030056**
Valves					
	Thermoelectric shut-off valve	1" connection, 230 V AC	200 x 50 x 300	all unit heaters	**196000030911**
	Thermoelectric shut-off valve	1 1/4" connection, 230 V AC	200 x 50 x 300	all unit heaters	**196000030912**
	Thermoelectric shut-off valve	1 1/2" connection, 230 V AC	200 x 50 x 300	all unit heaters	**196000030913**
	Thermoelectric shut-off valve	1" connection, 24 V AC/DC	200 x 50 x 300	Only to be used with KaControl!	**196000030931**
		1 1/4" connection, 24 V AC/DC	200 x 50 x 300	Only to be used with KaControl!	**196000030932**
		1 1/2" connection, 24 V AC/DC	200 x 50 x 300	Only to be used with KaControl!	**196000030933**

CONTINUED

Accessories

Article	Article	Properties	Dimensions	Suitable for	Article no.
			[mm]		
Repair switch					
	Repair switch	EC, supplied loose, degree of protection IP 65, max switching current 25 A Enables individual units in a switching group to be decommissioned by voltage disconnection. The thermal contacts are bridged in advance, and subsequently opened on the motor side so that the other units in the group can continue to operate without interruption	82 x 127 x 82	all unit heaters, air curtains 230 V with EC-motors	**196000030160**
Air outlets					
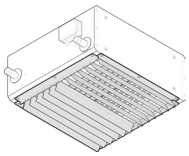	Louvre	two-row for wall- and ceiling-mounted units	495 x 35 x 495	model size 4	**198000034002**
			595 x 35 x 595	model size 5	**198000035002**
			695 x 35 x 695	model size 6	**198000036002**
			795 x 35 x 795	model size 7	**198000037002**
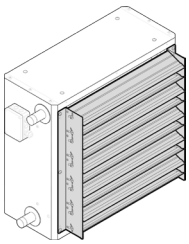	Induction air outlet louvre	mainly used for wall-mounted units, for ceiling-mounted units with ceiling heights of more than 4.0 m	425 x 100 x 495	model size 4	**198000034101**
			525 x 100 x 595	model size 5	**198000035101**
			100 x 700 x 630	model size 6	**198000036101**
			800 x 100 x 720	model size 7	**198000037101**
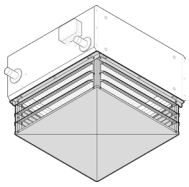	Diffuser	in four directions, for ceiling-mounted units	500 x 195 x 500	model size 4	**198000034004**
			600 x 195 x 600	model size 5	**198000035004**
			700 x 195 x 700	model size 6	**198000036004**
			800 x 195 x 800	model size 7	**198000037004**
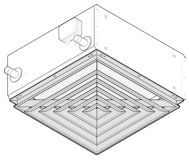	Diffuser screen	for ceiling-mounted units and optimum air distribution, only suitable for ceiling heights below 3.5 m	500 x 70 x 500	model size 4	**198000034005**
			600 x 70 x 600	model size 5	**198000035005**
			700 x 70 x 700	model size 6	**198000036005**
			800 x 70 x 800	model size 7	**198000037005**
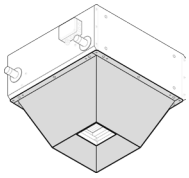	Outlet nozzle	for ceiling-mounted units, especially for high-ceilinged buildings	500 x 230 x 500	model size 4	**198000034006**
			600 x 260 x 600	model size 5	**198000035006**
			700 x 290 x 700	model size 6	**198000036006**
			800 x 320 x 800	model size 7	**198000037006**
		for ceiling-mounted units, especially for buildings with high-ceilings	900 x 350 x 900	model size 8	**198000038006**
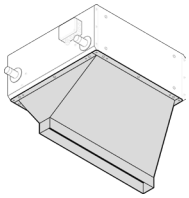	Wide nozzle	recirculating air only, suitable for industrial door air curtains	500 x 300 x 600	model size 4	**198000034007**
			600 x 340 x 700	model size 5	**198000035007**
			700 x 380 x 800	model size 6	**198000036007**
			800 x 420 x 900	model size 7	**198000037007**

CONTINUED

Accessories

Article	Article	Properties	Dimensions	Suitable for	Article no.
			[mm]		
	KaMAX	Multi Air MiX for ceiling-mounted units, manual level adjustment	500 x 160 x 500	model size 4	**198000034111**
			600 x 160 x 680	model size 5	**198000035111**
			150 x 680 x 780	model size 6	**198000036111**
			800 x 160 x 870	model size 7	**198000037111**
			900 x 160 x 900	model size 8	**198000038111**
	OPEN-STOP-CLOSE switch for KaMAX	for electrically actuated continuously variable manual adjustment of the KaMAX louvre	150 x 60 x 220	KaMAX	**196000030115**

Brackets

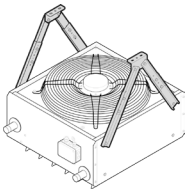	Universal 2-point brackets	recirculating air only	110 x 584 x 510	model sizes 4 to 7	**198000030041**
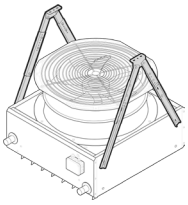	Universal 2-point brackets	recirculating air only	204 x 584 x 510	model size 8	**198000038041**
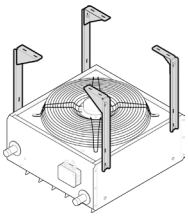	Universal 4-point brackets	recirculating air only made of sendzimir galvanised steel, for use as a 4-point fixing for ceiling installation	172 x 498 x 165	model sizes 4 to 7	**198000030042**
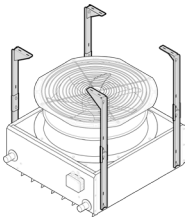	Universal 4-point brackets	recirculating air only made of galvanised sheet steel, as a 4-point fixing for ceiling installation	172 x 498 x 201	model size 8	**198000038042**
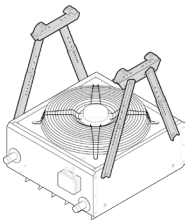	Universal 2-point T-support brackets	recirculating air only	119 x 54 x 523	model sizes 4 – 7	**198000030047**

CONTINUED

Accessories

Article	Article	Properties	Dimensions	Suitable for	Article no.
			[mm]		
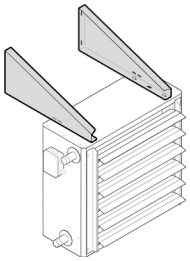	Wall brackets	recirculating air only made of sendzimir galvanised steel for wall mounting	251 x 50 x 585	model size 4	**198000034044**
				model size 5	**198000035044**
			268 x 50 x 635	model size 6	**198000036044**
			286 x 50 x 685	model size 7	**198000037044**
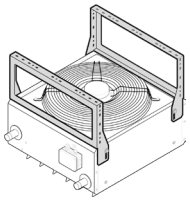	Ceiling-wall brackets		420 x 100 x 510	model size 4	**198000034049**
			420 x 100 x 610	model size 5	**198000035049**
			470 x 100 x 710	model size 6	**198000036049**
			470 x 100 x 810	model size 7	**198000037049**

Galvanised steel components

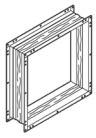	Flexible connection	square	500 x 160 x 500	model size 4	**198000034013**
			600 x 170 x 600	model size 5	**198000035013**
			700 x 160 x 700	model size 6	**198000036013**
			800 x 155 x 800	model size 7	**198000037013**
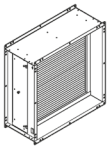	Filter box	ISO Coarse 90% filter	500 x 250 x 500	model size 4	**198000034010**
			600 x 250 x 600	model size 5	**198000035010**
			700 x 250 x 700	model size 6	**198000036010**
			800 x 250 x 800	model size 7	**198000037010**
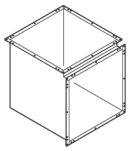	Air duct 90°		525 x 525 x 500	model size 4	**198000034021**
			625 x 625 x 600	model size 5	**198000035021**
			725 x 725 x 700	model size 6	**198000036021**
			825 x 825 x 800	model size 7	**198000037021**
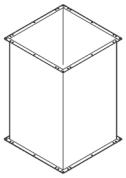	Air duct	square fixed frame on both sides	450 x 450 x 1000	model size 4	**198000034015**
			550 x 550 x 1000	model size 5	**198000035015**
			650 x 650 x 1000	model size 6	**198000036015**
			750 x 750 x 1000	model size 7	**198000037015**
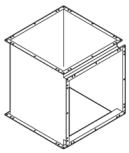	Air duct T-section		500 x 525 x 550	model size 4	**198000034022**
			600 x 625 x 650	model size 5	**198000035022**
			700 x 725 x 750	model size 6	**198000036022**
			800 x 825 x 850	model size 7	**198000037022**

CONTINUED

Accessories

Article	Article	Properties	Dimensions	Suitable for	Article no.
			[mm]		
Components					
	Unit heater shut-off set, angled version	1″ connection	150 x 95 x 188	model size 4	**198000034976**
				model size 5	**198000035976**
		1 1/4″ connection	145 x 160 x 170	model size 6	**198000036976**
		1 1/2″ connection	155 x 170 x 200	model size 7	**198000037976**
				model size 8	**198000038976**
	Unit heater shut-off set, straight version	1″ connection	140 x 95 x 185	model size 4	**198000034977**
				model size 5	**198000035977**
		1 1/4″ connection	165 x 100 x 220	model size 6	**198000036977**
		1 1/2″ connection	155 x 170 x 155	model size 7	**198000037977**
				model size 8	**198000038977**
Services					
	Surcharge for powder-coating	Unit heater housing, RAL 9016 or RAL 7035	0 x 0 x 0	model size 4	**198000034040**
				model size 5	**198000035040**
				model size 6	**198000036040**
				model size 7	**198000037040**

TOP C – Heating and cooling in a 2-pipe system

The demand for cooling buildings is also continuing to increase in industrial climate control. In a system with chiller/heat pumps, the TOP C offers a simple solution to both: dissipating heating or cooling loads.

The most flexible climate control solution for storage, production, and sales. The fan support ensures fast-reacting heating and cooling of the hall.

Control of TOP C is continuously variable with the cost effective EC fans to supply the precise output actually required. This also means unnecessary sound emissions are avoided.

A version of the TOP C is available with a powerful condensate pump for delivery heights of up to 8 m or without a pump for free condensate drainage.

Product benefits;

- heating or cooling in a 2-pipe system with a single unit
- whisper-quiet sickle-blade fan with energy-efficient EC technology complies with ErP requirements
- two capacity levels of copper/aluminium heat exchanger
- fully equipped with condensate tray and droplet separator fitted
- optionally available with high-performance condensate pump installed
- either electromechanical control version or with decentralised KaControl configuration, depending on the unit
- decentralised intelligent KaControl for integration into BACnet, Modbus or KNX building automation systems
- single-row wall louvre and motor guard as standard
- recirculating air accessories are available for wall installation (mixed air or primary air accessories and ceiling-mounted version available on request)

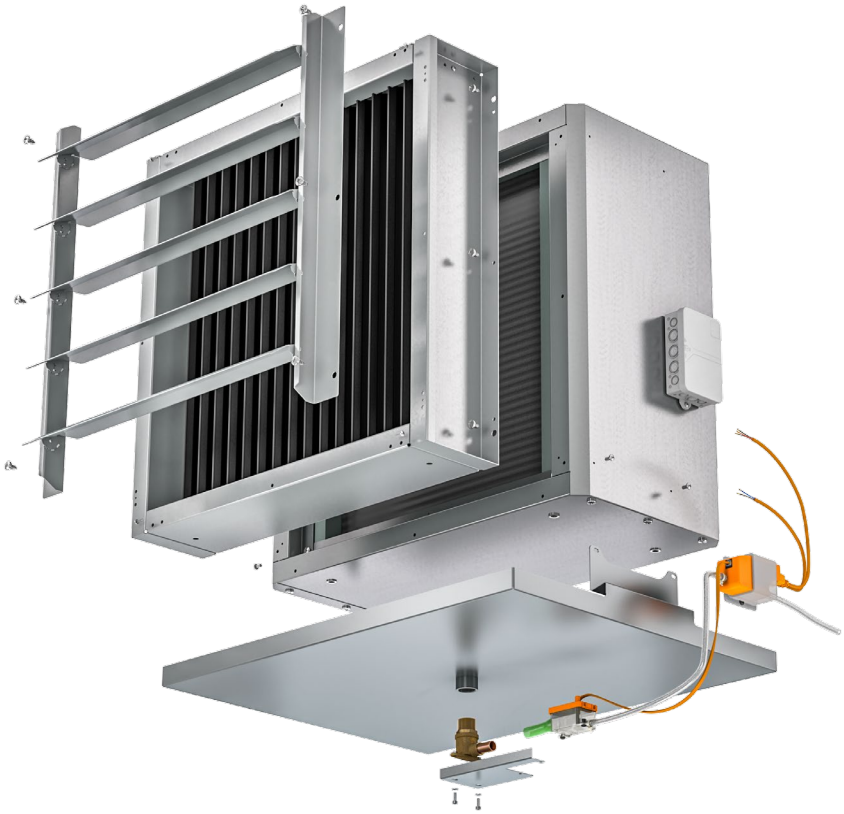

Exploded view

Front view

Rear view

Find more information at:
▸ www.kampmann.co.uk/hvac/products/unit-heaters/top-c
Use our online calculation programs to calculate your heat outputs and technical data with a couple of clicks!

Kampmann.co.uk/top

Subject to technical changes. 407/07.2020 UK

Kampmann UK Ltd.
Dial House, Govett Avenue
Shepperton, Middlesex, TW17 8AG
Great Britain

T +44 (0)1932 228592
F +44 (0)1932 228949
E info@kampmann.co.uk
W Kampmann.co.uk