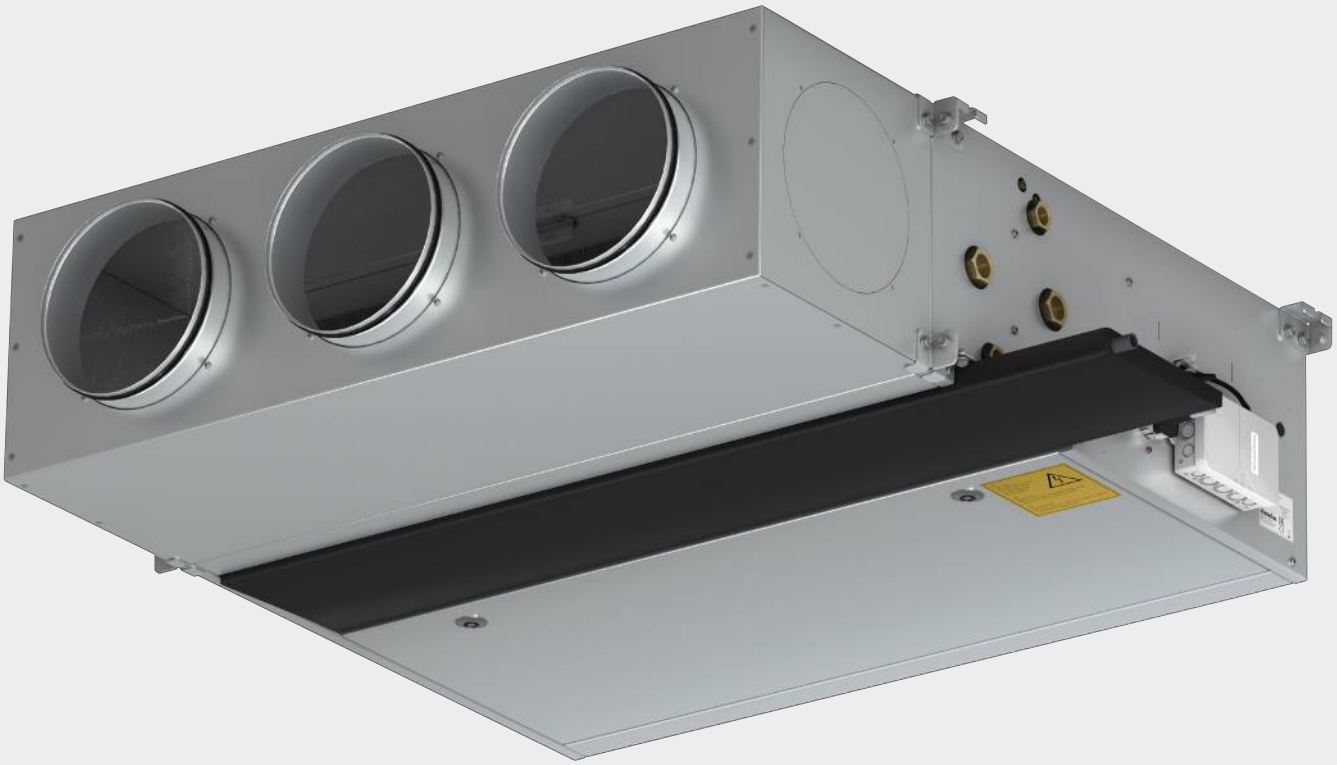

Venkon XL

► **Assembly, installation and operating instructions**

Keep these instructions in a safe place for future use!

Issue04/22EN
SAP No.1374732

KAMPMANN

Table of contents

1 General

1.1 About these instructions

These instructions ensure the safe and efficient handling of this equipment. These instructions form an integral part of the equipment and have to be kept in the direct vicinity of the equipment and available to personnel at all times.

All personnel must have carefully read through these instructions prior to commencing all work on the equipment. A fundamental prerequisite for safe working is compliance with all the stated safety instructions and other instructions contained in this manual.

In addition all local occupational health and safety at work regulations apply, as do general safety provisions governing the use of the equipment.

Illustrations in this guide are intended to provide a basic understanding and may differ from the actual model.

Ongoing tests and further developments may result in small variations between the unit supplied and the instructions.

1.2 Explanation of Symbols

DANGER!
This combination of symbol and signal word indicates an immediately dangerous situation caused by electrical power, which will cause death or serious injury if not avoided.

WARNING!
This combination of symbol and signal word indicates a possible hazardous situation.

IMPORTANT NOTE!
It represents a potentially hazardous situation, which could lead to damage to property or for a measure to optimise workflows.

IMPORTANT NOTE!
This symbol highlights useful hints, recommendations and information for efficient and trouble-free operation.

2 Safety

This section provides an overview of all important safety aspects to ensure optimum protection of personnel as well as safe and trouble-free operation. In addition to the safety instructions in these operating instructions, the valid safety, accident prevention and environmental protection regulations must be observed for the area of use of the unit. It is the duty of the operator to ensure that instructions relating to maintenance (e.g. relating to hygiene) are complied with.

2.1 Correct use

The units are only intended to be used for heating and cooling air in frost-free and dry rooms. Within the room, the unit needs to be connected to the building's heating/cooling/ventilation system and to the building's waste water and power network. The operating limits and limits of use described in Chapter 2.2 [▸ 6] must be observed.

IMPORTANT NOTE!
Only use the unique after completion of the complete building and system. Site heating is not deemed to be correct and proper use.

Intended use of the unit also includes adherence to these instructions.

Information in accordance with EN60335-1

- This unit can be used by children aged 8 years or more and also by people with reduced physical, sensory or mental capabilities or a lack of experience and knowledge, if they are supervised or have been instructed in the safe use of the unit and the resulting dangers. Do not allow children to play with the unit. Do not allow children to clean and maintain the unit without supervision.
- This unit is not intended for permanent connection to the drinking water supply system.
- This unit is intended for being accessible to the general public.

Any use beyond or other than the stated intended use is considered as misuse.

Any change to the unit or use of non-original spare parts will cause the expiry of the warranty and the manufacturer’s liability.

2.2 Limits of operation and use

Limits of operation		
Min./max. water temperature	°C	4-90
Min./max. air intake temperature	°C	6-40
Min./max. air humidity	%	20-60
Min. operating pressure	bar/kPa	-
Max. operating pressure	bar/kPa	10/1000
Min./max. glycol percentage	%	0-50

Tab. 1: Limits of operation

Operating voltage	230 V/ 50/60 Hz
Power/Current consumption	On the type plate

Tab. 2: Operating voltage

We would refer to VDI-2035 Sheets 1 & 2, DIN EN 14336 and DIN EN 14868 with regard to the properties of the medium used to protect the equipment. The following values provide further guidance.

The water used should be free of contamination, such as suspended substances and reactive substances.

Water quality		
pH value (at 20 °C)		8-9
Conductivity (at 20 °C)	µS/cm	< 700
Oxygen content (O_2)	mg/l	< 0.1
Hardness	°dH	4-8.5
Sulphur ions		not measurable
Sodium ions (Na^+)	mg/l	< 100
Iron ions (Fe^{2+})	mg/l	< 0.1
Manganese ions (Mn^{2+})	mg/l	<0.05
Ammonia ions (NH^{4+})	mg/l	< 0.1
Chlorine ions (CI)	mg/l	< 100
CO_2		< 50
Sulfate ions (SO_4^{2-})	mg/l	< 50
Nitrite ions (NO_{2+})	mg/l	< 50
Nitrate ions (NO_{3+})	mg/l	< 50

Tab. 3: Water quality

IMPORTANT NOTE!

Danger of frost in cooling mode!

There is a risk of the heat exchanger freezing when used in unheated rooms.

- Make sure that the unit is equipped with a frost protection sensor and/or thermostat in this case.

IMPORTANT NOTE!

Warning of misuse!

In the event of misuse, as itemised below, there is a danger of limited or failing operation of the unit. Ensure that the airflow can circulate freely.

- Never operate the unit in humid areas, such as swimming pools, wet areas etc.
- Never operate the unit in rooms with an explosive atmosphere.
- Never operate the unit in aggressive or corrosive atmospheres (e.g. sea air).
- Never operate the unit above electrical equipment (such as switch cabinets, computers or other electrical units, or contacts that are not drip-proof).
- Never use the unit as a construction site heater.
- Never operate the unit in areas with a high dust content.

IMPORTANT NOTE!

Energy losses due to misuse!

Operating the unit with open windows (or other room openings) can result in significant energy losses.

- Heating and cooling modes (particularly when operating different units) need to be coordinated with each other.

2.3 Risk from electrocution!

DANGER!

Risk of fatal injury from electrocution!

Contact with live parts will lead to fatal injury from electrocution. Damage to the insulation or individual components can lead to a fatal injury.

- Only permit qualified electricians to work on the electrical system.
- Immediately disconnect the system from the power supply and repair it in the event of damage to the insulation.
- Keep live parts away from moisture. This can cause a short circuit.
- Properly earth the unit.

DANGER!

Risk of fatal injury from electrocution!

- Where multiple EC fans are connected in parallel, an electrical charge (>50 C) is present between line conductor and protective earth conductor when the power is switched off. Before working on the electrical connection, short-circuit the network connections and PE!
- The terminals and connectors are still energised even when the unit is switched off. Use a two-pole voltage tester to establish that the unit has been de-energised. Only open the unit 5 minutes after all poles of the voltage have been switched off.
- The protective earth carries high leakage currents (depending on the frequency, intermediate voltage and motor capacity). Therefore, check EN-compliant earthing under test conditions (EN 50178, art. 5.2.11). Without earthing, hazardous voltages can occur on the motor housing. In case of a fault, electrical voltage will be present on the rotor and impeller. Rotor and impeller are base-insulated. Do not touch!

2.4 Personnel requirements - Qualifications

Expertise

The installation of this product requires specialist knowledge of heating, cooling, ventilation, installation and electrical engineering. This knowledge, generally learned in professional training in one of the fields mentioned above, is not described separately.

Damage caused by improper installation is the responsibility of the operator or installer. The installer of these units should have adequate knowledge of the following gained from specialist professional training

- Safety and accident prevention regulations
- Guidelines and recognised technical regulations, i.e. Association of German Electricians VDE regulations, DIN and EN standards.
- VDI 6022; maintenance personnel must be trained to Category B (possibly Category C) to comply with hygiene requirements (as required).

The installation, operation and maintenance of this unit must comply with the applicable laws, standards, provisions and regulations in the respective country and the current state of the art.

2.5 Personal Protective Equipment

Personal protective equipment is used to protect people from impaired safety and health when working with the unit. The applicable accident prevention regulations at the place of use apply in all cases.

Personnel have to wear personal protective equipment during maintenance and troubleshooting on and with the unit.

3 Transport, storage and packaging

3.1 General transport instructions

Check on delivery for completeness and transport damage.

Proceed as follows in the event of visible damage:

- Do not accept delivery or only accept with reservations.
- Record any transport damage on the transportation documents or on the transport company's delivery note.
- Submit a complaint to the freight forwarder.

IMPORTANT NOTE!
Warranty claims can only be made within the applicable period for complaints. (More information is available in the T&Cs on the Kampmann website)

IMPORTANT NOTE!
2 people are needed to transport the unit. Wear personal protective clothing when transporting the unit. Only lift the unit on both sides and not by the pipes / valves.

IMPORTANT NOTE!

Material damage caused by incorrect transport!
Units being transported can drop or topple over if transported wrongly. This can cause serious material damage.

- Proceed carefully when unloading the equipment on delivery and when transporting it on site and note the symbols and instructions on the packaging.
- Only use the holding points provided.
- Only remove packaging shortly before assembling the unit.

3.2 Scope of delivery

IMPORTANT NOTE!

Check the scope of delivery!

- Check the delivery for damage.
- Check that the articles and type numbers are correct.
- Is the delivery and number of items delivered correct?

3.3 Storage

Store packaging under the following conditions:

- Do not store outdoors.
- Store in a dry and dust-free place.
- Store in a frost-free place.
- Do not expose to aggressive media.
- Protect from direct sunlight.
- Avoid mechanical vibrations and shocks.

IMPORTANT NOTE!
Under certain circumstances, packages can carry storage instructions that exceed the requirements listed here. Comply with these instructions accordingly.

3.4 Packaging

Handling packaging materials

IMPORTANT NOTE!
Dispose of packaging materials in line with the applicable statutory requirements and local regulations.

IMPORTANT NOTE!
The packaging is also use to protect the product from site dust and dirt. Only remove packaging shortly before assembling the unit.

4 Technical data

Unit	Venkon XL			
Model	1	2	3	4
Width of basic unit [mm]	500	900	1300	1700
Width of basic unit including condensate tray overhang [mm]	694	1094	1494	1894
Weight of basic unit [kg]	33	51	71	88
Weight of basic unit with connection unit for circular pipe [kg]	40	64	86	104
Air volume [m³/h] [1]	110 - 680	395 - 1465	405 - 2200	845 - 2975
Internal volume of 2-pipe system [l]	1.4	2.8	4.2	5.7
Internal volume of 4-pipe system heating [l]	0.2	0.4	0.6	0.9
Internal volume of 4-pipe system cooling [l]	1.4	2.8	4.2	5.7
Connection size 2-pipe	Rp 3/4"	Rp 3/4"	Rp 3/4"	Rp 3/4"
Connection size 4-pipe heating	Rp 1/2"	Rp 1/2"	Rp 1/2"	Rp 1/2"
Connection size 4-pipe cooling	Rp 3/4"	Rp 3/4"	Rp 3/4"	Rp 3/4"
Heat output [kW] [2]	1.5 - 10.6	4.0 - 22.8	4.5 - 34.4	8.4 - 46.9
Flow rate, heating [kg/h] [2]	125 - 580	474 - 1359	471 - 1916	718 - 4033
Cooling output [kW] [3]	0.7 - 3.4	2.8 - 7.9	2.7 - 11.2	5.6 - 16.9
Flow rate, cooling [kg/h] [3]	125 - 580	474 - 1359	471 - 1916	969 - 2899
Sound power level, suction-side [dB(A)]	43 - 62	46 - 65	48 - 67	49 - 68
Sound power level, pressure-side [dB(A)]	39 - 63	44 - 67	45 - 68	47 - 70

1 at 30 Pa external pressure, ISO Coarse filter, continuously variable control

2 at LPHW 75 / 65°C, t_{L1} = 20°C

3 at CHW 7/12°C, t_{L1} = 27 °C, 48% relative humidity

5 Construction and function

5.1 Overview

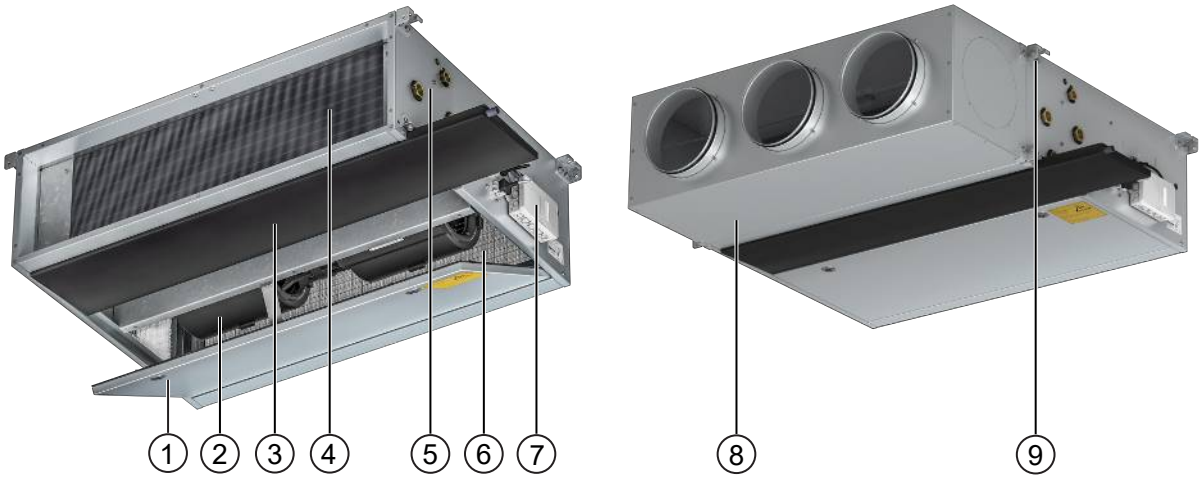

Fig. 1: Venkon XL at a glance (connection shown on left)

1	Service hatch	6	Filter
2	EC radial fan	7	Electrical connection
3	Condensation tray	8	Connection unit for circular pipe
4	Heat exchanger	9	Suspension and connecting bracket
5	Water connections		

5.2 Brief description

Venkon XL are decentralised units for the heating, cooling and filtering of air, for use in hotels, offices and business premises, among others. Secondary air is drawn in filtered by the fan and passed through the copper/aluminium heat exchanger. Here the air is either heated or cooling depending on the temperature of the water in the heat exchanger. The heated or cooled air is discharged into the room through the optional connection unit for circular pipes.

5.3 Wear parts list

Figure	Article	Properties	Suitable for	Art. no.
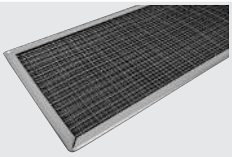	ISO Coarse spare filter	1 set = 1 mat	Model 1	348016000000
			BG 2	348026000000
		1 set = 2 mats	Model 3	348036000000
			BG 4	348046000000
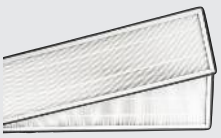	ISO spare filter ePM10>50% (M5)	1 set = 1 mat	Model 1	348016005000
			BG 2	348026005000
		1 set = 2 mats	Model 3	348036005000
			BG 4	348046005000

6 Installation and wiring

6.1 Definition of the connection side

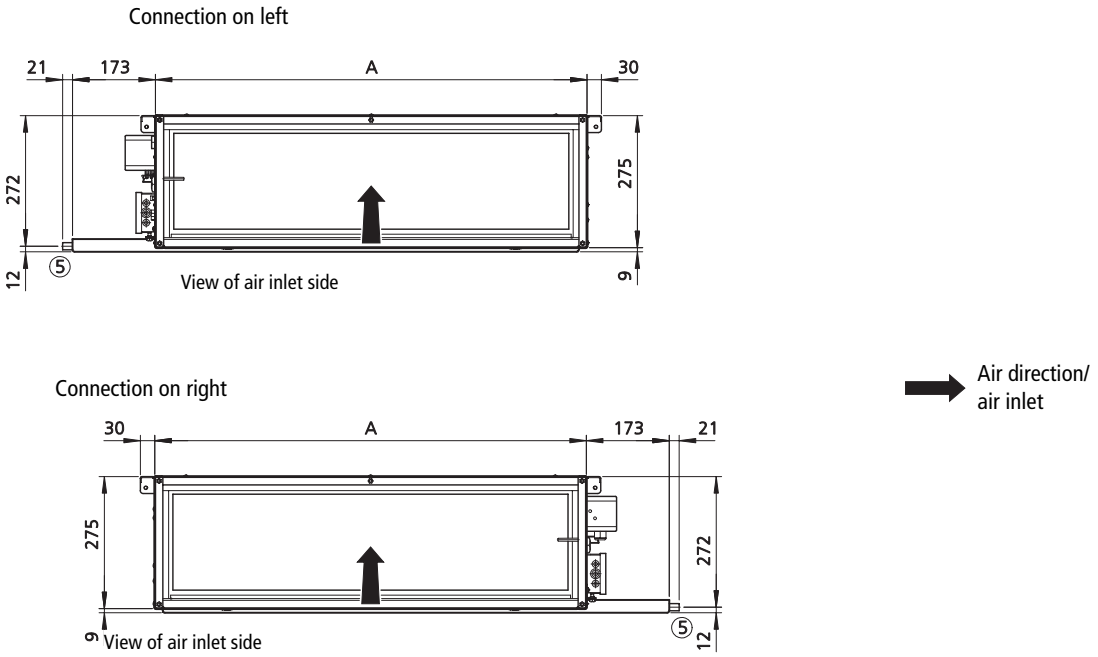

Fig. 2: Definition of left/right connection

6.2 Requirements governing the installation site

Only install and assemble the unit if the following conditions are met:

- Make sure that the wall/ceiling is sufficiently load-bearing to take the weight of the unit (Technical data [▸ 13]).
- Make sure that the unit is securely suspended/standing.
- Ensure that the airflow can circulate freely.
- Provide adequate space for appropriately sized flow and return water connections on site (Connection to the pipe network [▸ 22]).
- There is a power supply on site (Maximum electrical rating values [▸ 33]).
- If need be, provide a condensation connection with a sufficient gradient on site.

6.3 Minimum clearances

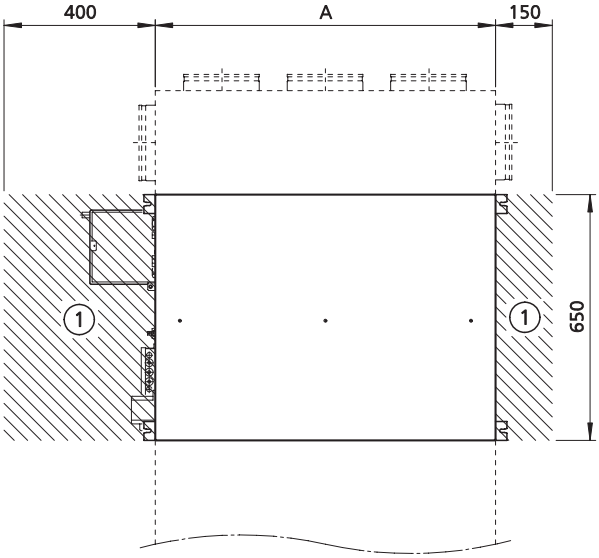

Fig. 3: Minimum clearances (top view, connection on left)

With suspended ceiling units, provide the following service hatches for installation, maintenance and inspection beside the unit (see hatched area) and below the unit:

Model	Unit width A [mm]
1	500
2	900
3	1300
4	1700

Tab. 4: Minimum clearances

6.4 Installation

2 people are needed to install the unit.

CAUTION!

Risk of injury from sharp metal housing!
The inner metal of the casing can have sharp edges.

- Wear suitable protective gloves.

IMPORTANT NOTE!

Horizontal installation of units!
When installing the units, ensure that they are completely horizontal to ensure proper operation.

IMPORTANT NOTE!

Avoid draughts!
Consider the occupied zone when installing/suspending the units. Do not expose people to the direct air flow. Position the unit accordingly and adjust the air outlet if required.

6.4.1 Installation of basic unit

Each Venkon XL unit is fixed to the ceiling or an on-site structure at 4 points. The units are suspended on mounting brackets, for instance on threaded rods (M8).

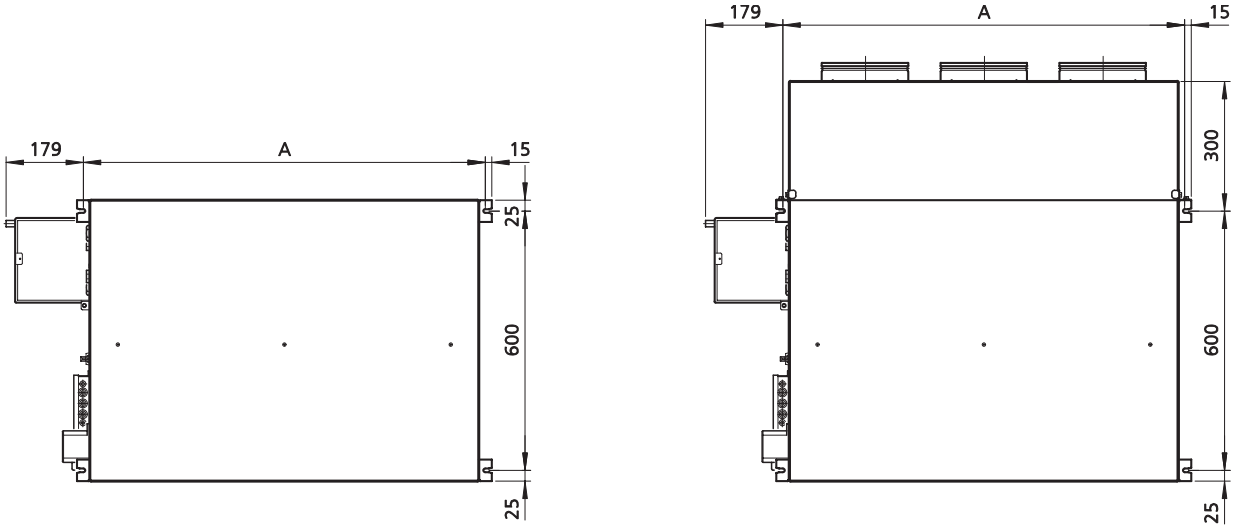

Fig. 4: Suspension points (top view, connection on left)

Model	Distance A (suspension)
1	530
2	930
3	1330
4	1730

Tab. 5: Spacing of suspension points

 Fig. 5: Suspending the unit	Suspend the unit using the suspension and connecting brackets to on-site suspensions (recommended: M8 threaded rod with washer and nut).
 Fig. 6: Adjusting the suspension	Level the unit and, if need be, adjust it by adjusting the nuts.
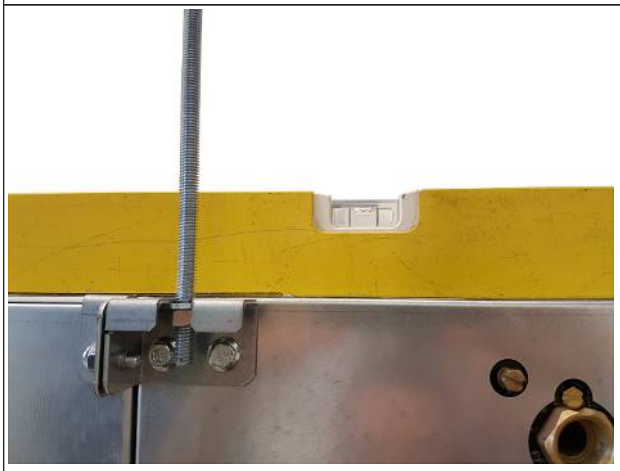 Fig. 7: Checking alignment	Use an appropriate tool to check the alignment of the unit.

6.4.2 Installation of sheet steel accessories

Overview of air-side sheet steel accessories

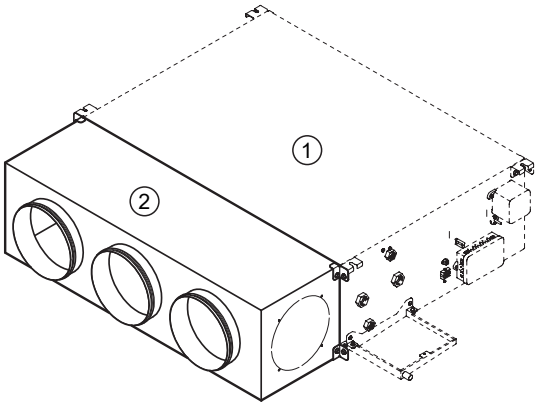

Fig. 8: Basic unit with connection unit for circular pipe

1	Basic unit	2	Connection unit for circular pipe

Figure	Description	Dimensions [mm/ inch]
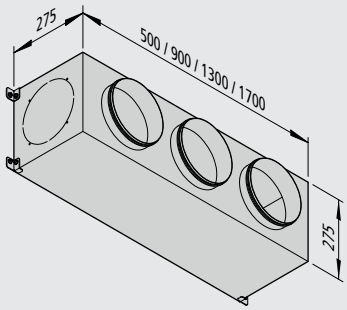	Connecting unit for circular pipe with spigot DN 200	Model 1: 500 /19.7 Model 2: 900/ 35.4 Model 3: 1300/ 51.2 Model 4: 1700/ 66.9

Tab. 6: Air-side sheet steel accessories

Venkon XL are available in the following models ex works:

- Basic unit
- Basic unit with connection unit for circular pipe fitted

Proceed as follows should it be necessary to retrofit a connection unit for circular pipe to a basic unit on site (assembly requires 2 people):

 Fig. 9: Screwing on the connecting bracket	Use 4.8x13.0 metal screws to fix the connecting brackets (2 no. with model 2, 4 no. with model 3 and model 4) to the top and bottom of the air outlet side.
 Fig. 10: Positioning the connecting unit	Position the connecting unit in front of the air outlet and hand-tighten the M6x10 self-locking screws at the 4 corners.
 Fig. 11: Tightening the screws externally	Use an appropriate tool to tighten the screws on the suspension and connecting brackets.

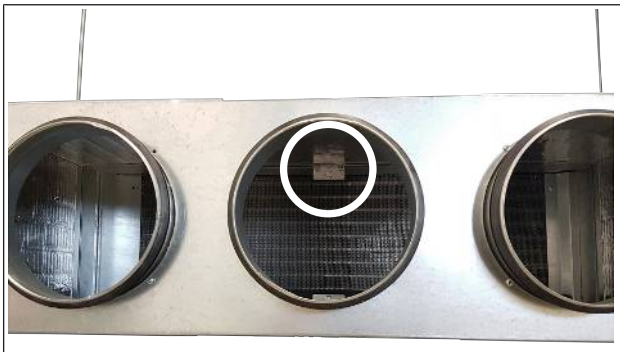 Fig. 12: Turning the screws internally	Hand-tighten the M6x10 self-locking screws on the inner connecting brackets (accessible through one of the spigots).
 Fig. 13: Tightening the screws internally	Use an appropriate tool to tighten the screws on the internal connecting brackets.

Frame connection dimensions

The air inlet side of Venkon XL units can be connected to a ductwork system (by others).

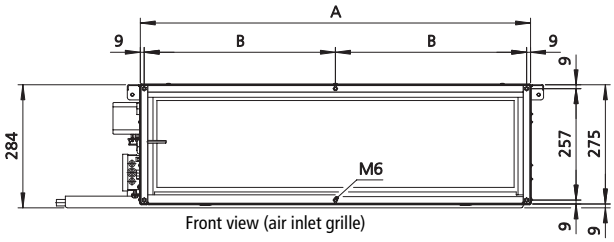

Fig. 14: Frame connection dimensions

Model	A [mm]	B [mm]
1	500	482
2	900	441
3	1300	416 – 450 - 416
4	1700	561

6.5 Installation

Actuator with 'First Open' function

- When delivered, the actuator is normally open in a de-energised state, thanks to the First Open function. This enables heating mode to run even if the electric wiring is not yet completed.
- When subsequently commissioned and with the application of power (for longer than 6 minutes), the First Open function is automatically unlocked so that the actuator becomes fully operational.

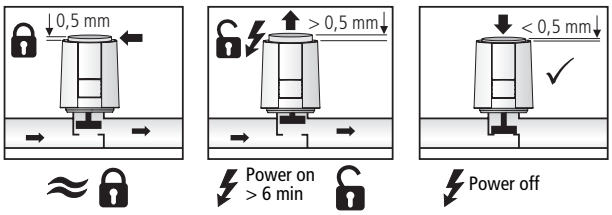

Fig. 15: "First Open" function

Hydraulic connection

Note the following points when connecting the hydraulic side:

- Install and test safety components (expansion vessels, pressure relief valves and overflow valves).
- Route condensation lines with a sufficient cross-section without bends and narrow sections with a gradient to the in situ waste water pipe.
- Allow adequate space for the air flow (air inlet and outlet).

Additionally consider the following point with cooling mode:

- Provide continuous vapour-tight insulation on all components that carry water (pipework, valves, connections) as far as the unit.
- Select appropriate pipe brackets (cooling clamps) for cooling mode.
- Dimension the diameter of the condensate line appropriately.
- Protect any traps (if fitted) in the condensate line from drying out.

6.5.1 Connection to the pipe network

The flow and return connections are located on the left or right side of the unit, looking in the air direction.

Route the pipes so that no mechanical stresses are transferred to the heat exchanger and to ensure that the unit can be accessed with ease for maintenance and repair work. Proceed as follows when connecting up the unit's hydraulic pipework:

- Shut off the heating/cooling medium and prevent it from being opened accidentally before connecting to on-site pipework and making the hydraulic connections on the basic unit, as there is a danger of scalding from escaping heating medium!
- With cooling units there is a danger to the user from cold temperatures and a danger to the environment from the use of glycol. Take appropriate safety measures.
- Remove protective caps from the flow and return.
- **With 2-pipe systems:** Remove the red protective caps from the ¾" connection, leaving the yellow protective caps in the unit.
- **With 4-pipe systems:** Remove the red protective caps from the ¾" and ½" connections.
- With 4-pipe systems: remove the red protective caps from the 3/4" and 1/2" connections.
- With cooling mode, route pipes and any valves directly over the protruding condensation tray to drain any condensation produced on the pipes during cooling mode into the tray.
- Seal and tighten the connections. Prevent the connection nuts from shearing and twisting.
- When connecting the unit to the on-site pipework, make sure that you use a suitable tool to hold the unit's water connections in place!
- Make sure that the pipes can be vented.
- Use suitable insulating material, impermeable insulating material for cooling units.
- Tighten all threaded connections once the pipes have been fitted and check that they are not under any tension.

Venkon XL, connection on left

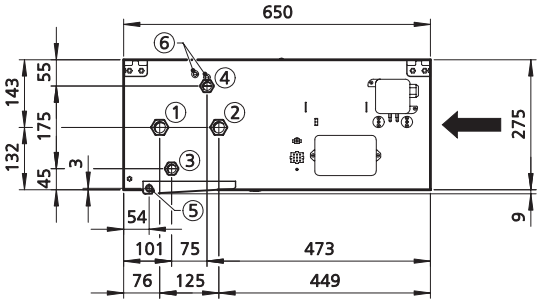

Side view, connection side

Venkon XL, with flexible connection unit, connection on left

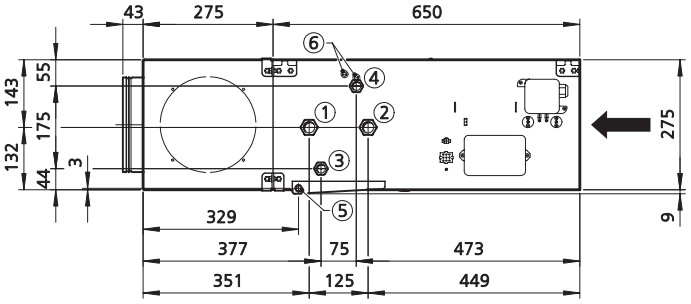

Side view, connection side

Venkon XL, connection on right

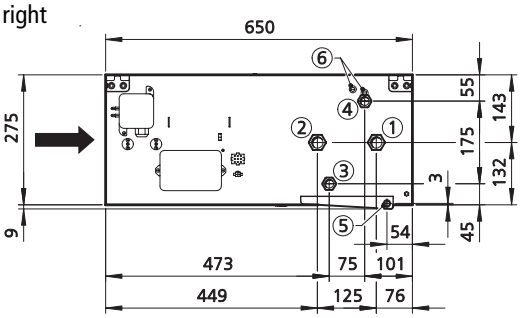

Side view, connection side

Venkon XL, with flexible connection unit, connection on right

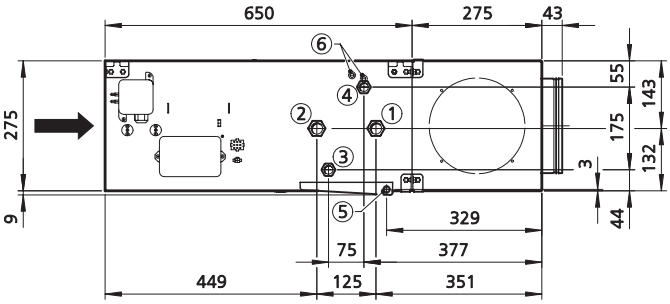

Side view, connection side

Fig. 16: Dimensions of 4-pipe

1	Cooling flow 2-pipe and 4-pipe (also heating with 2-pipe)	2	Cooling return 2-pipe and 4-pipe (also heating with 2-pipe)
3	Heating flow 4-pipe	4	Heating return 4-pipe
5	Drain spigot on condensate tray D=15 mm	6	Air vent

Water connections	2-pipe		4-pipe	
Model	1 - 4		1 - 4	
Coil	Heating	Cooling	Heating	Cooling
Connection (Rp)	¾"	¾"	½"	¾"

Tab. 7: Heat exchanger connecting dimensions

6.5.2 Overview of valve kits

Accessories for recirculating air basic unit, water-side, supplied separately				Suitable for	Art no.
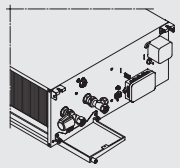	Valve kit DN 20	with actuator Open/ Close 230 VAC	straight, with pre-set-table 2-way valve, with return shut-off valve, KVS value 2.3	2-pipe or 4-pipe cooling, electromechanical control	196000348231
		with actuator Open/ Close 24 V AC/DC		2-pipe or 4-pipe cooling, electromechanical control and KaControl	196000348241

Accessories for recirculating air basic unit, water-side, supplied separately				Suitable for	Art no.
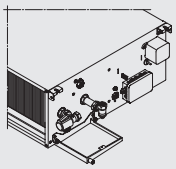		with actuator Open/ Close 230 VAC	angled, with pre-set-table 2-way valve, with return shut-off valve, KVS value 3.0	2-pipe or 4-pipe cooling, electromechanical control	196000348232
		with actuator Open/ Close 24 V AC/DC		2-pipe or 4-pipe cooling, electromechanical control and KaControl	196000348242
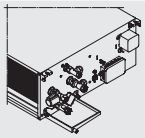	Valve kit DN 15	with actuator Open/ Close 230 VAC	straight, with pre-set-table 2-way valve, with return shut-off valve, KVS value 1.7	4-pipe heating, electromechanical control	196000348431
		with actuator Open/ Close 24 V AC/DC		4-pipe heating, electromechanical control and KaControl	196000348441
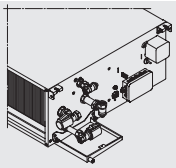		with actuator Open/ Close 230 VAC	angled, with pre-set-table 2-way valve, with return shut-off valve, KVS value 3.0	4-pipe heating, electromechanical control	196000348432
		with actuator Open/ Close 24 V AC/DC		4-pipe heating, electromechanical control and KaControl	196000348442
	Adjustment kit for higher-flow rate valves		For pre-settable valves and valve kits with higher flow	all valve kits	194000346916

6.5.3 Connection of 2-way valve kit

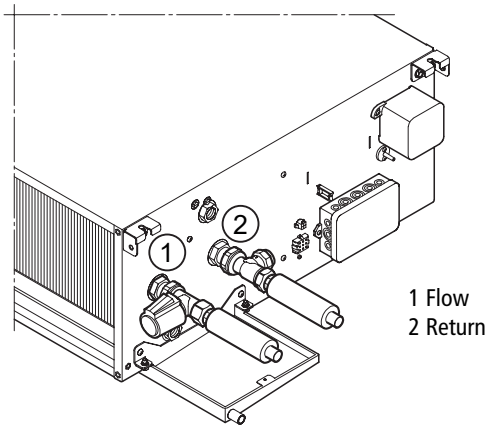

2-way valve kit, straight
2-pipe, connection on left

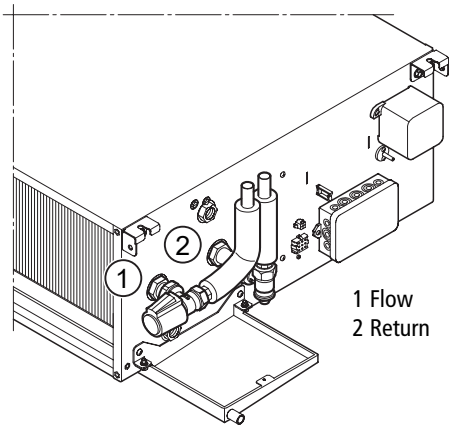

2-way valve kit, angled version
2-pipe, connection on left

Fig. 17: 2-way valve kit, 2-pipe

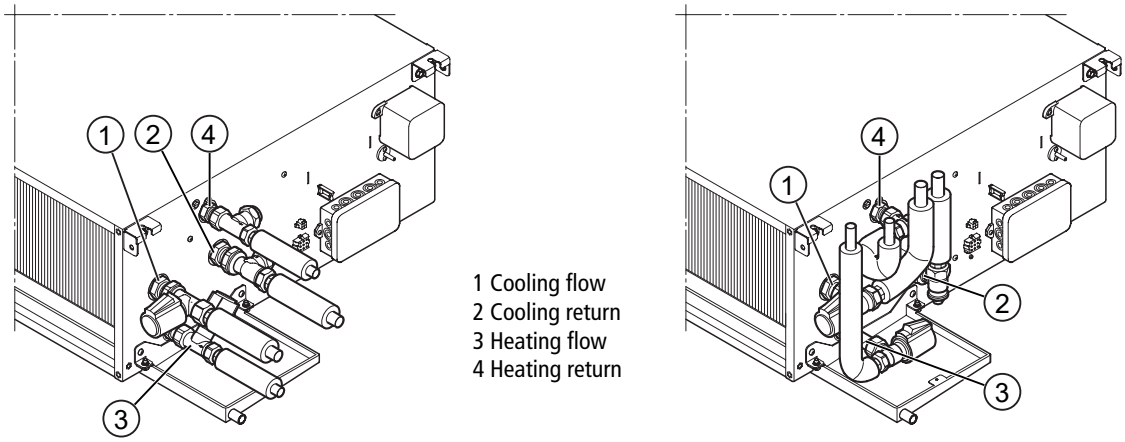

2-way valve kit, straight
4-pipe, connection on left

2-way valve kit, angled version
4-pipe, connection on left

Fig. 18: 2-way valve kit, 4-pipe

Note: The pipework and insulation is for illustration only and is provided by others!

6.5.4 Condensation connection

6.5.4.1 Condensation drain with natural gradient

It is essential that a condensation drain is connected and appropriate fixed to a Venkon condensation drain connector (drain size 15 mm). Ensure that the gradient is at least 1 cm/m, without restrictions and without rising sections of pipe to ensure the drainage of condensate from the basic unit (in accordance with DIN EN 12056; formerly: DIN 1986-100). Take into account all applicable regulations, such as the use of a ball trap, when connecting the condensation line to the sewer system. Protect the trap from drying out. The suction effect of the fan on the condensation drain neck could otherwise produce troublesome odours. Consider using water vapour-impermeable insulation depending on the pipe material used for the condensation drain. You will need a condensation pump (optional accessories) should a natural gradient be impossible on site. This is used to pump the condensate into higher collection or discharge equipment.

Condensate drains

- Connect a trap to all condensate drain connectors.
- Provide a sufficiently high barrier water height (Hs).

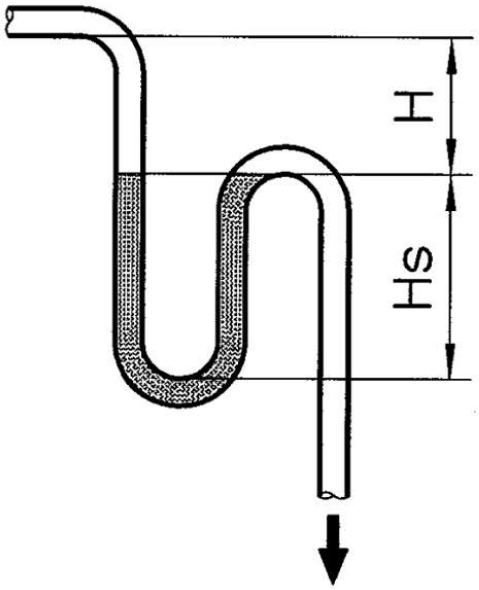

Fig. 19: Barrier water height

Barrier water height:

Hs = H + 50 mm

H = static negative pressure in the unit (mm water column)

(1 mm water column = 9.81 Pa)

Minimum barrier water height Hs = 60 mm

6.5.4.2 Condensate drainage using a condensate pump (accessory)

The water is drawn off by the condensate pump and discharged along a hose (supplied loose) connected on the pressure side. Depending on conditions on site, the water can be discharged into drainage lines, possibly with a trap connection.

In the event of a fault with the condensate drain, the water level will continue to rise until the float switch triggers an alarm contact. The contact can be analysed by external signalling devices.

We would recommend automatically terminating cooling operation, possibly with a shut-off valve, if the alarm contact is triggered to prevent the condensate tray from overflowing.

Condensation drain

- Drainage of condensation from the condensation pump has to be provided along a natural gradient with an adequate cross-section (minimum 1/2"). Increase the cross-section of the line with longer condensate lines.
- Check whether the condensation line needs to be insulated to prevent the build-up of condensation along the line.
- Do not use a rigid transition to the on-site condensation drain, as this lengthens the pump's pressure hose. We would recommend free overflow into a trap.

Installation, cabling of the condensation pump (accessory)

The condensate pump needs a separate power supply 230 V/50 Hz. We would generally advise against connecting it via the room thermostat, as residual condensate could be produced after it has been switched off. Additional wires are needed to analyse the alarm contact.

Use the following types of cable:

- Mains supply: NYM-J, 1.5 mm²
- Alarm contact: The cable for the alarm contact depends on the kind of alarm analysis used (e.g. shielded cable).
- Connect supply power and alarm contact (separate cable with plug) as per the wiring diagram supplied.

Connecting the Condensate Pump

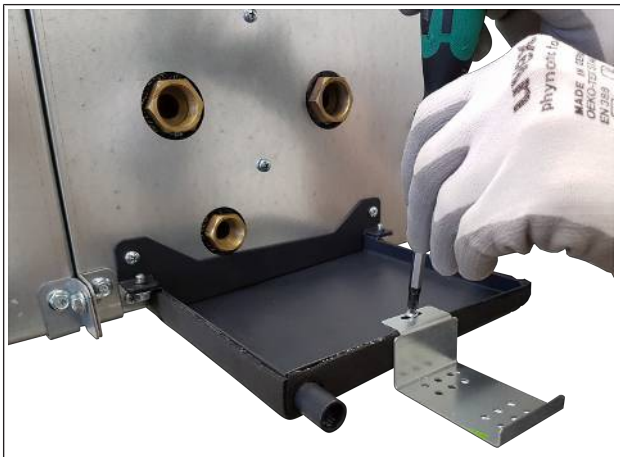 Fig. 20: Fitting the float switch	Use 3.9 x 9.5 mm metal screws to fix the bracket for the float switch.

 Fig. 21: Fitting the bracket for the pump	Use 4.8 x 13.0 mm metal screws to fix the bracket for the float switch.
 Fig. 22: Attaching the angle fitting	Place a 21.2 mm wire retention clamp on the angle fitting and push the short leg of the fitting onto the condensate tray.
 Fig. 23: Fitting the float switch	Place a 22.1mm wire retention clamp on the angle fitting and push the float switch onto the long leg of the fitting.

 Fig. 24: Attaching the vent	Use a cable tie to fix the float switch in place and use a 6.1 mm wire retention clamp to fix the vent hose in place.
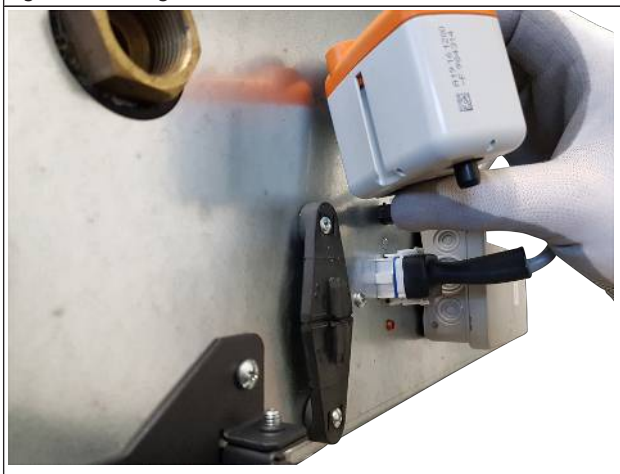 Fig. 25: Attaching the condensate pump	Push the groove of the condensate pump onto the bracket, with the electrical connections at the top right.
 Fig. 26: Connecting to the power supply	Open the power supply connector locking device (turn lock to "open lock" symbol), insert the power supply plug and then lock ("locked lock" symbol).

 Fig. 27: Connecting the suction hose	Attach 2 no. 10.1 mm wire retention clamps to the 6x1.5 mm PVC hose (length = 400 mm) and attach the hose to the float switch.
 Fig. 28: Attaching the suction hose	Attach the suction hose to the pump.
 Fig. 29: Inserting the float switch signal cable	Insert the signal cable from the float switch to the condensate pump.

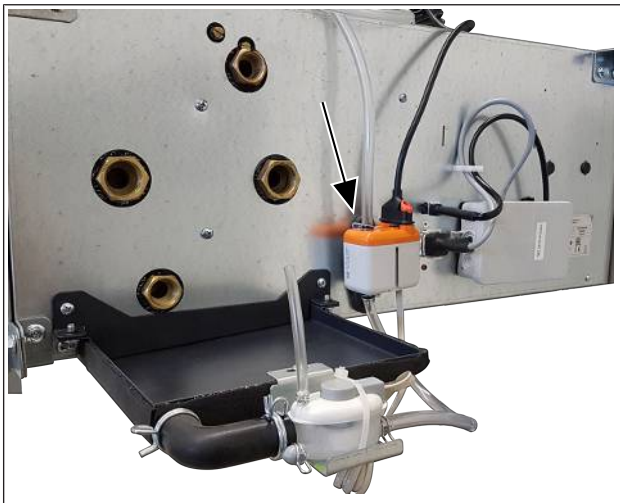 Fig. 30: Attaching the condensate drain line	Attach the condensate drain to the pump.
 Fig. 31: Vent valve	Connect the hose (diameter 6 mm) (by others) to the vent valve and use cable ties to secure in place.

On completion of the work, attach all wire retention clamps (using conventional pliers) and check that they are all tight. Check the assignment and positions against the following figure:

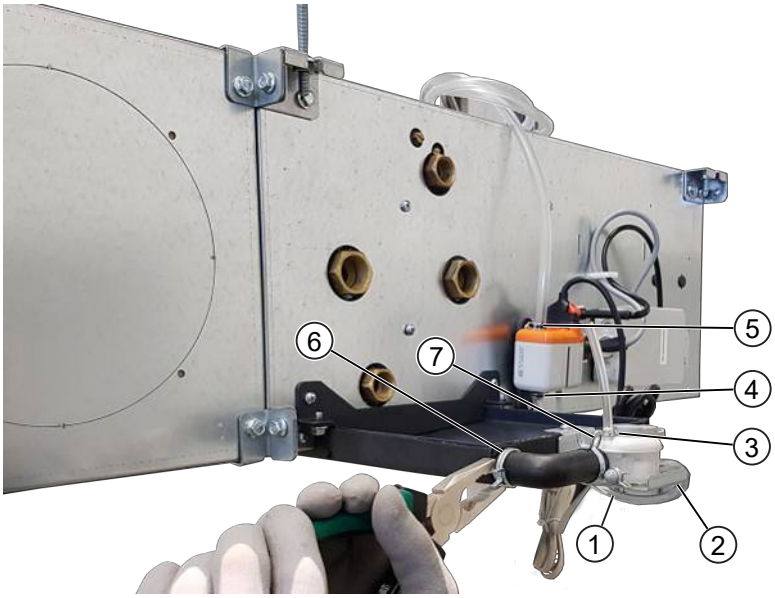

Fig. 32: Attaching the wire clamps

Position	Model [mm]
1	10.1
2	10.1
3	6.1
4	10.1
5	10.1
6	21.2
7	22.1

Tab. 8: Assignment of wire retention clamps

Technical data on the condensation pump

Max. pumping quantity	20 l/h
Maximum suction height	3 m
Maximum delivery height	10 m
Power supply	230 V-50 Hz-14 W
Contact for safety shut-off	NC 8A ohmic load
Overheating protection	115°C
Operating mode	Continuous operation
Protection class	IP20
Switching points (mm)	On: 16, Off: 11, Alarm: 19
Noise level at 1 m distance	20 dBA

Tab. 9: Technical data on the Sauermann SI30 condensate pump

7 Electrical connection

IMPORTANT NOTE!

Condensation formation in the cooling unit!

In the event of on-site valve control, the cooling valve must be closed when the fans are switched off.

7.1 Maximum electrical rating values

Venkon XL, electromechanical model (*00)

Model	Number of fans	Nominal voltage	Mains frequency	Nominal power	Nominal current	Leakage current	Ri analogue input	Protection rating	Protection class
1	1x Single	V AC	50 Hz	90 W	0.76 A	< 3.5 mA	100 KΩ	IP21	I
2	1x Tandem	V AC	50 Hz	178 W	1.45 A	< 3.5 mA	100 KΩ	IP21	I
3	1x Single, 1x Tandem	V AC	50 Hz	297 W	2.32 A	< 3.5 mA	50 KΩ	IP21	I
4	2x Tandem	V AC	50 Hz	377 W	2.93 A	< 3.5 mA	50 KΩ	IP21	I

Tab. 10: Maximum electrical rating values for Venkon XL EC, electromechanical model (*00)

Venkon XL, KaControl model (*C1)

Model	Number of fans	Nominal voltage	Mains frequency	Nominal power	Nominal current	Leakage current	Ri analogue input	Protection rating	Protection class
1	1x Single	230 V AC	50 Hz	90 W	0.76 A	< 3.5 mA	20 KΩ	IP21	I
2	1x Tandem	230 V AC	50 Hz	178 W	1.45 A	< 3.5 mA	20 KΩ	IP21	I
3	1x Single, 1x Tandem	230 V AC	50 Hz	297 W	2.32 A	< 3.5 mA	20 KΩ	IP21	I
4	2x Tandem	230 V AC	50 Hz	377 W	2.93 A	< 3.5 mA	20 KΩ	IP21	I

Tab. 11: Maximum electrical rating values for Venkon XL EC, KaControl (*C1)

7.2 Electromechanical control, Venkon XL

7.2.1 Connection (*00 or 00D), Venkon XL

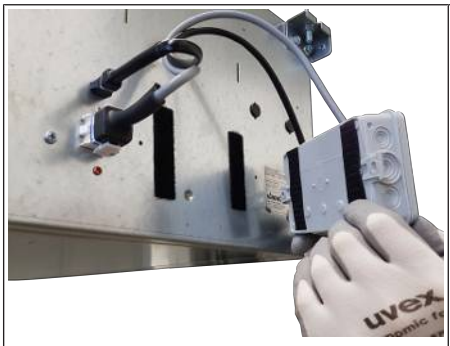

Fig. 33: Remove junction box from the Velcro strip

The junction box for electromechanical control can be electrically installed separately from the side panel of the basic unit by Velcro fitting. Simply remove the plastic lid to open the junction box.

Description of wiring

- Factory-fitted actuators are wired to the terminal. The appropriate terminals are available for valve drives on site.
- The speed of EC fans used is continuously variably controlled by a 0 – 10 V DC signal. The "intelligent" motor electronics detects any possible motor fault and automatically switches off the fan.

Fig. 34: Junction box of Venkon XL

Note these points in the following wiring diagrams for Venkon XL with electromechanical control:

- Comply with the details on cable types and cabling with due consideration for VDE 0100.
- Without *: NYM-J. The requisite number of wires, including protective earth, is stated on the cable. Cross-sections are not stated, as the cable length is involved in the calculation of the cross-section.
- With *: J-Y(ST)Y 0.8mm. Lay separately from power lines.
- If other types of cables are used, they must be at least equivalent.
- The terminals on the unit are suitable for a maximum wire cross-section of 2.5 mm².
- Only pulse and/or all-current sensitive residual current protective devices (type A or B) are permitted when using residual current protective devices. When power is applied to the unit, pulse-like capacitor load currents in the integrated EMC filter can lead to the RCCB being immediately tripped. We recommend residual current protective switches with a threshold of 300 mA and delayed triggering (super resistant, characteristic K).
- The electrical data [▸ 33] need to be respected when rating the in situ mains power supply and fusing.

7.2.2 Cabling, Venkon XL (*00), control by Climate Controller 30155

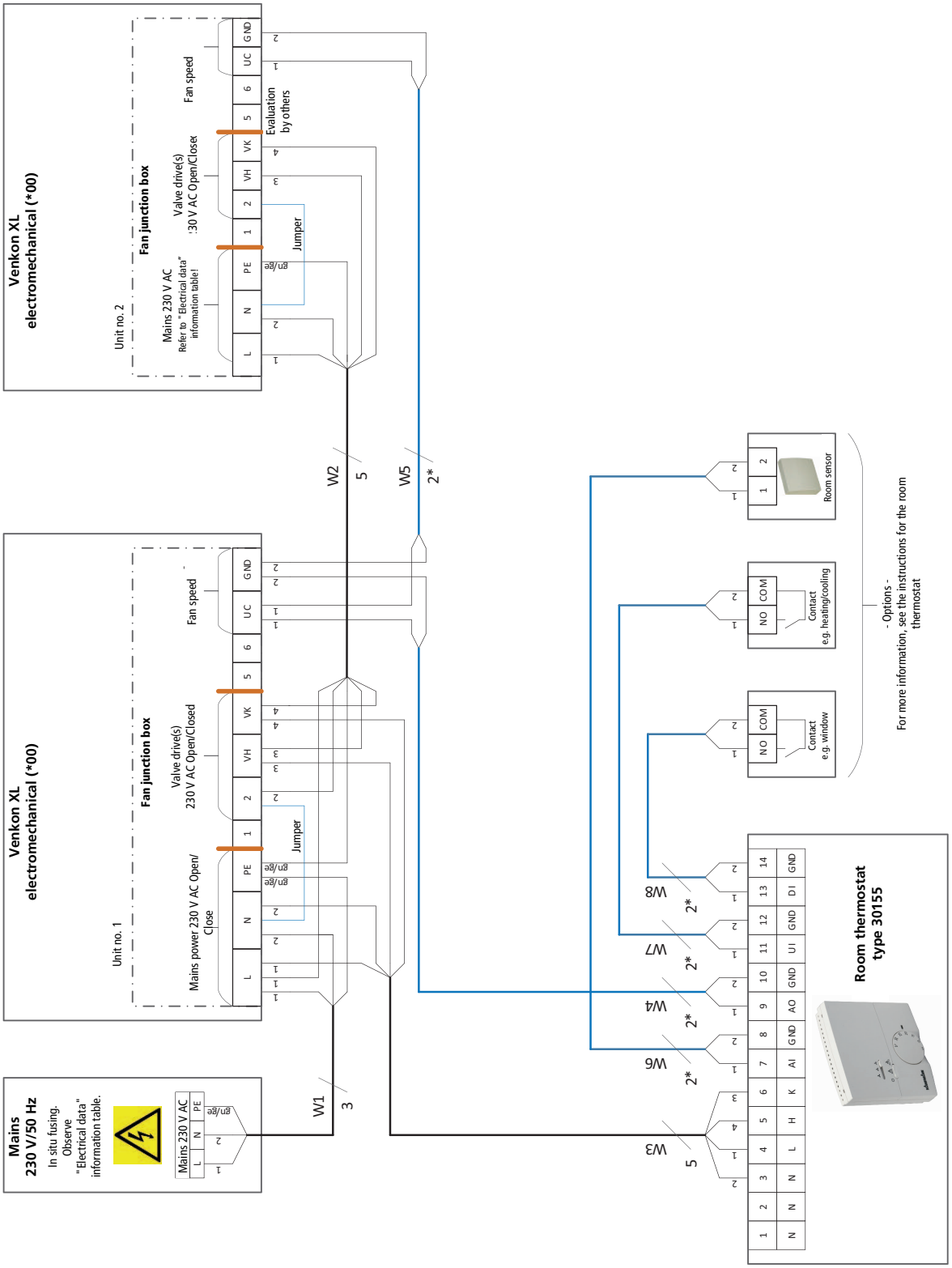

7.2.3 Cabling, Venkon XL (*00), control by Climate Controller 30155, with condensate pump

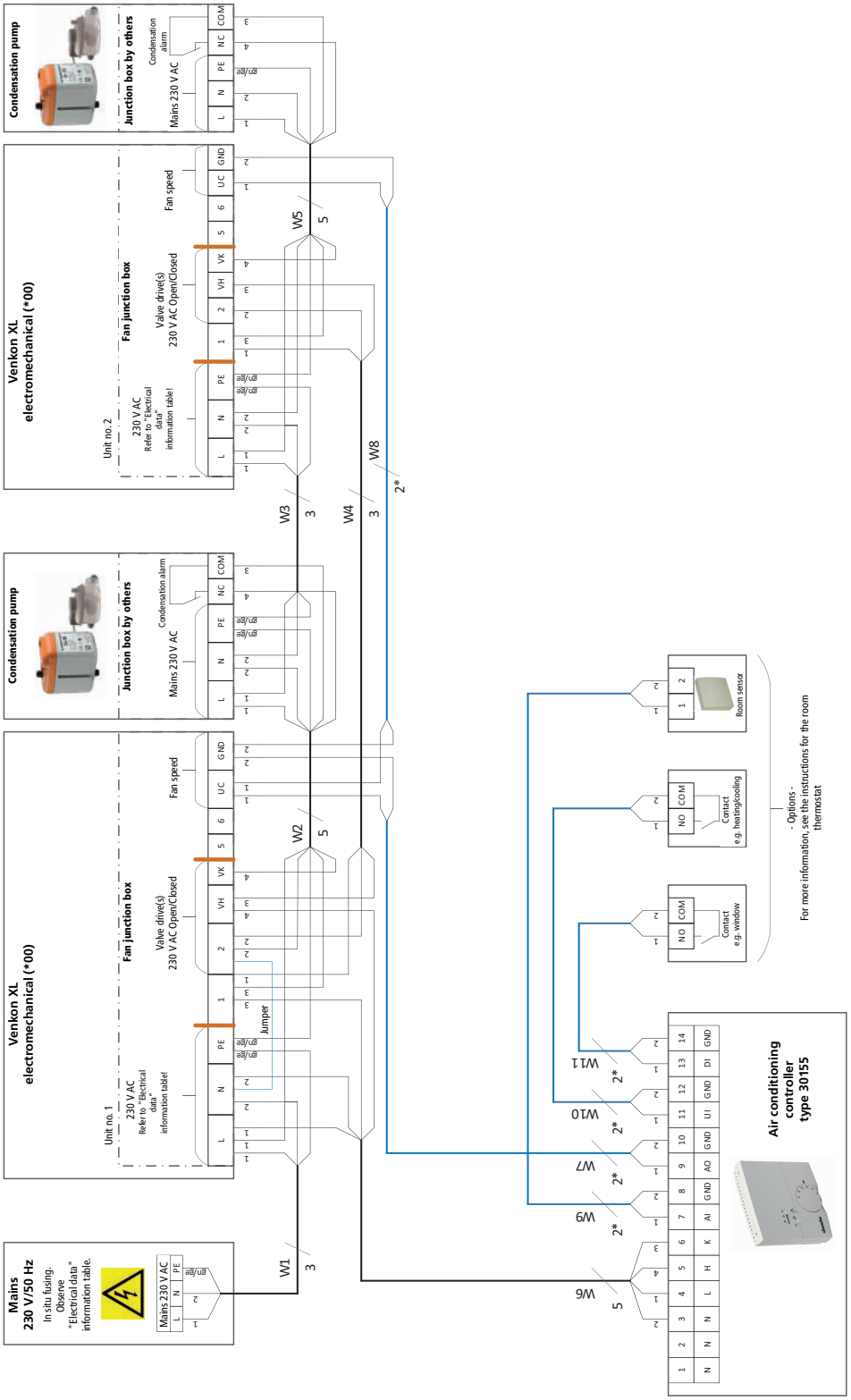

7.2.4 Cabling, Venkon XL (*00), control by Climate Controller 30256

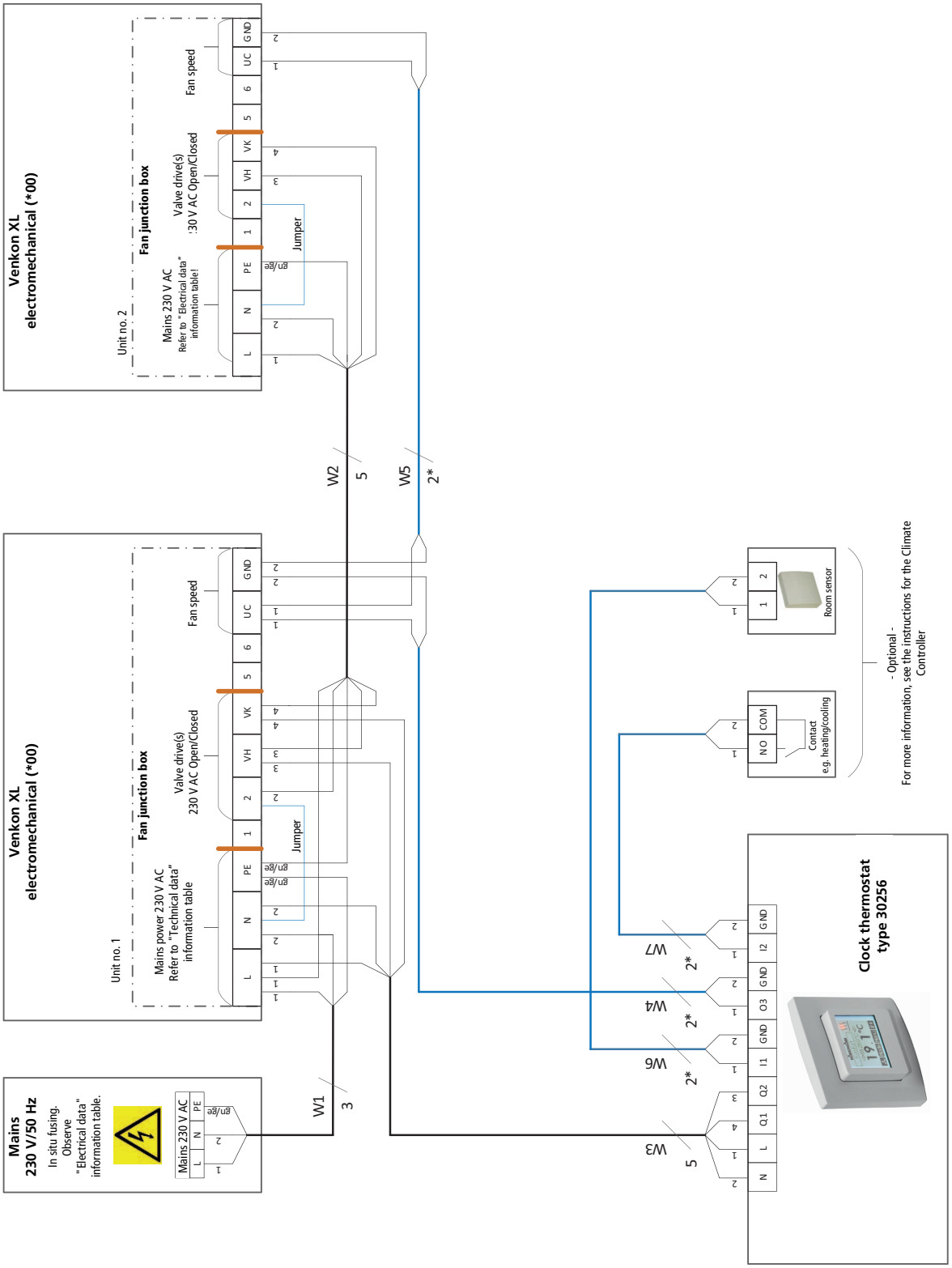

7.2.5 Cabling, Venkon XL (*00), control by Climate Controller 30256, with condensate pump

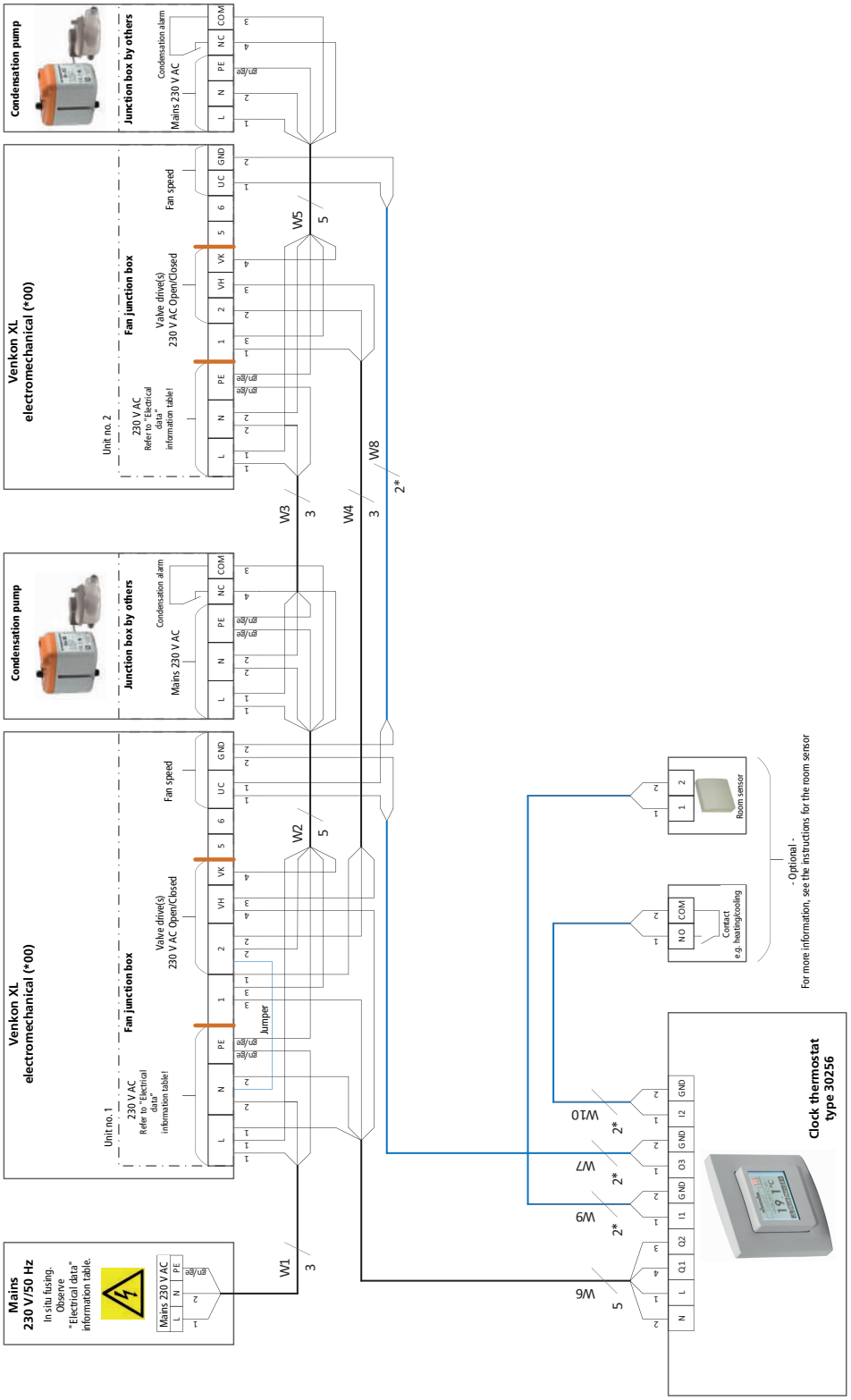

7.2.6 Cabling, Venkon XL (*00), control by Climate Controller type 148941/148942

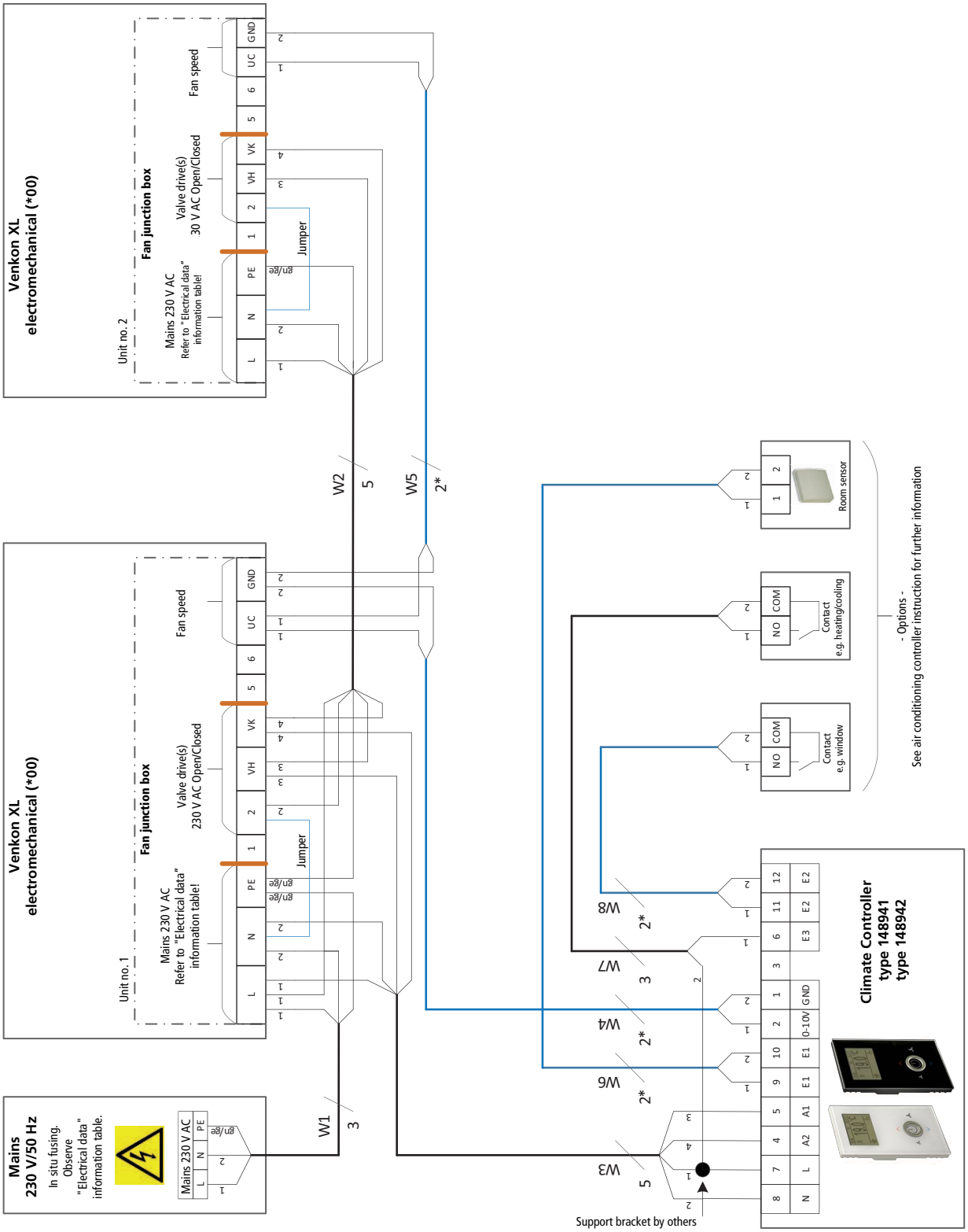

7.2.7 Cabling, Venkon XL (*00), control by Climate Controller type 148941/148942, with condensate pump

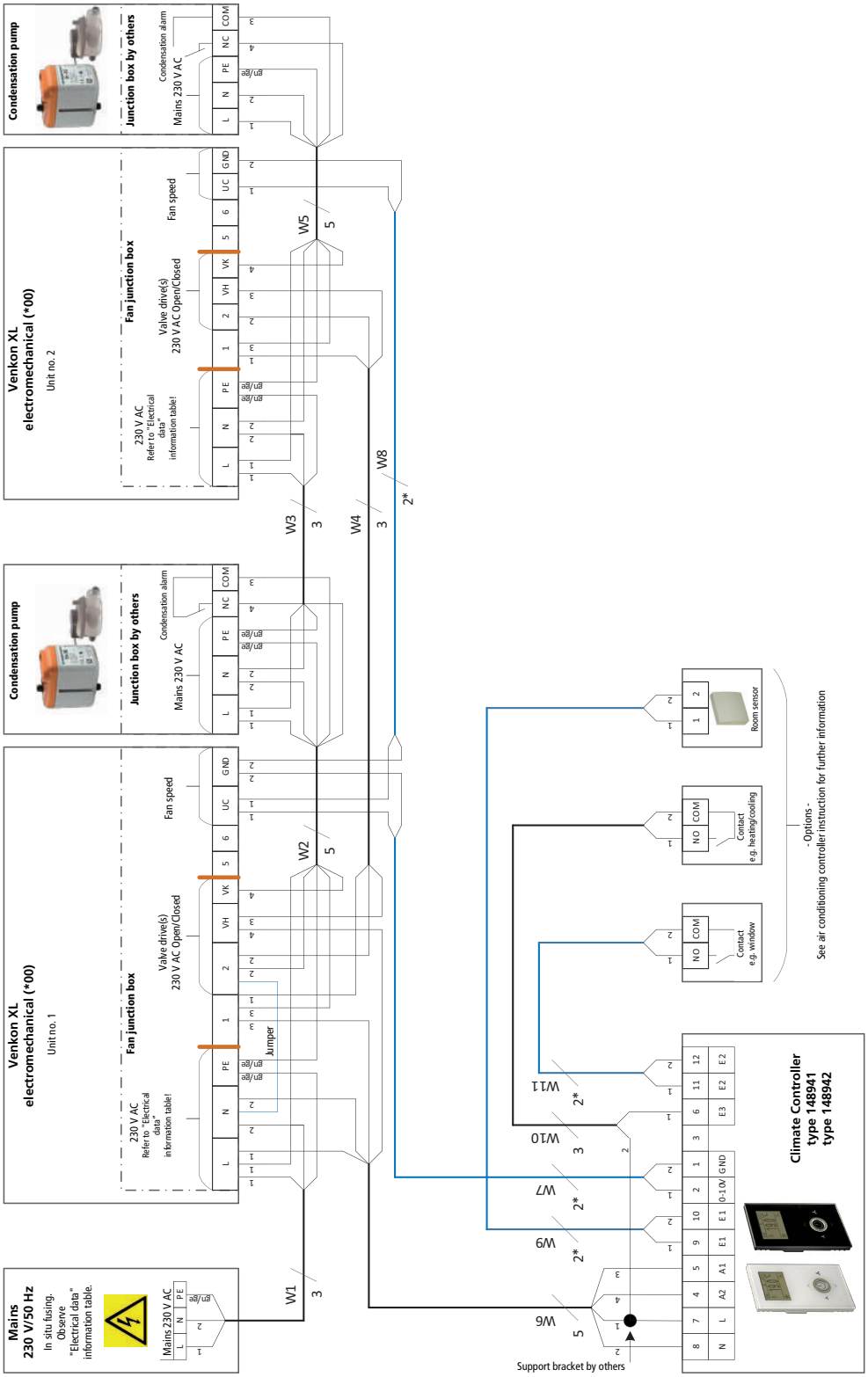

7.2.8 Cabling, Venkon XL (* 00), control by DDC/BMS

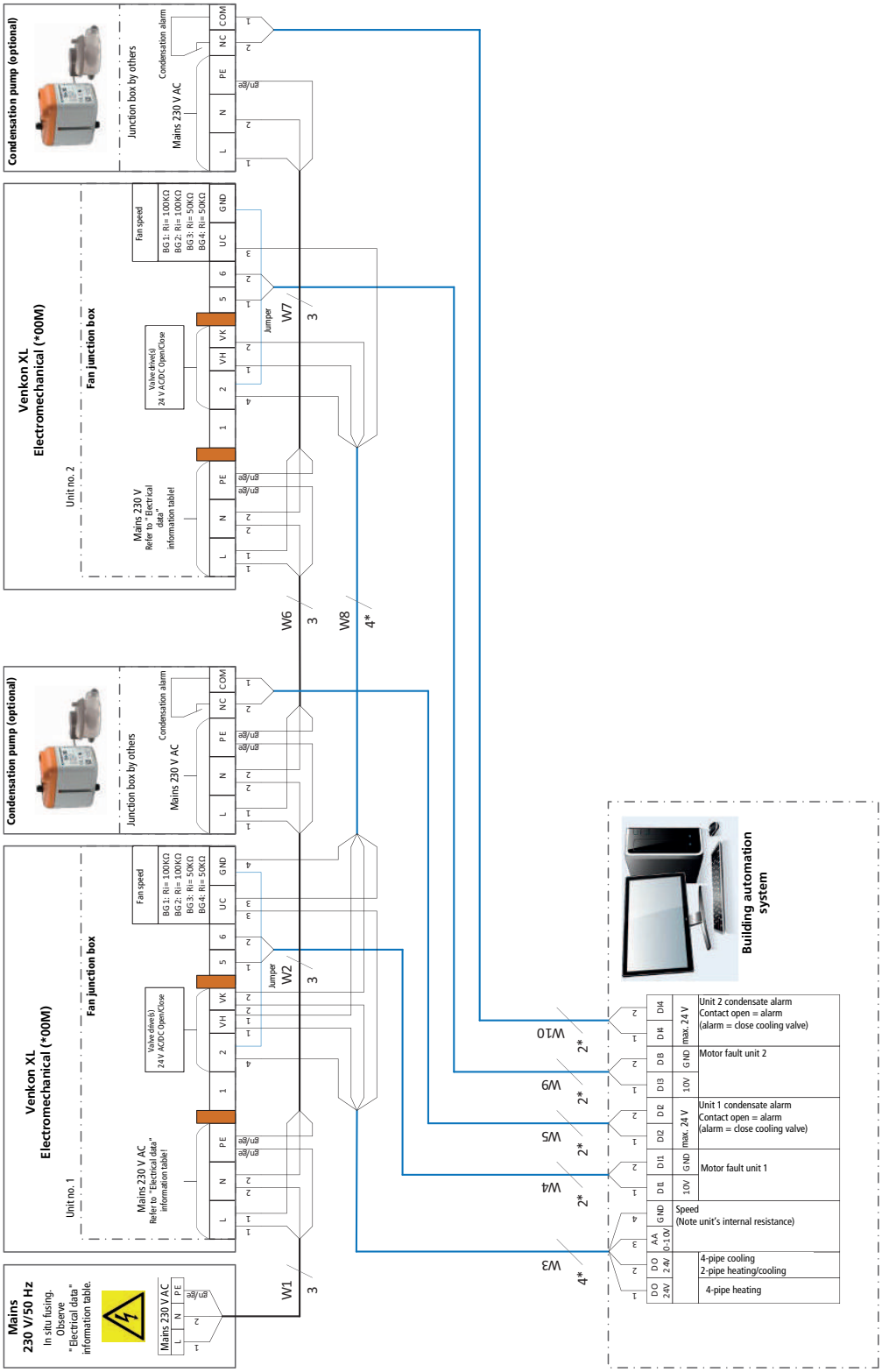

7.3 KaControl (*C1)

7.3.1 KaController installation

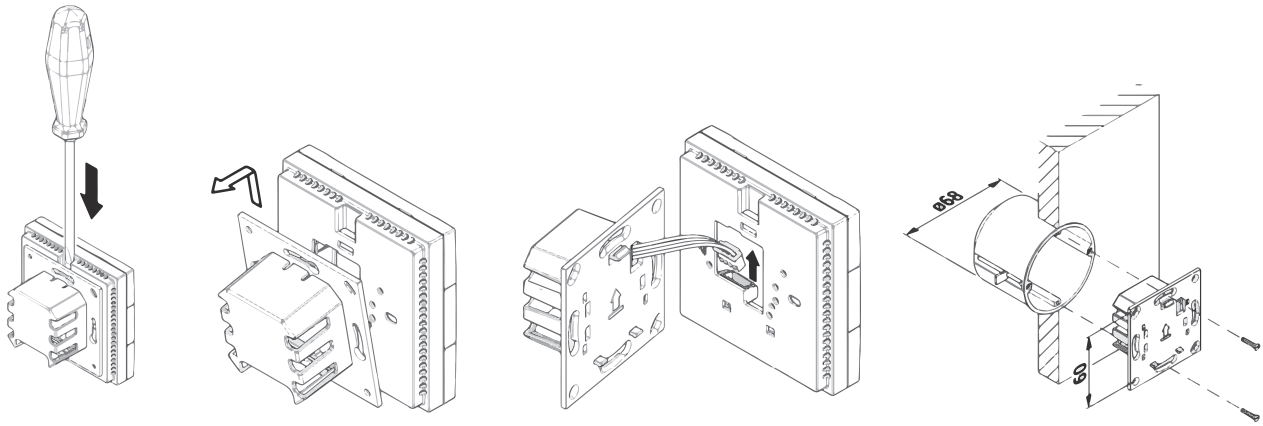

Fig. 35: Installation of flush-mounted back box

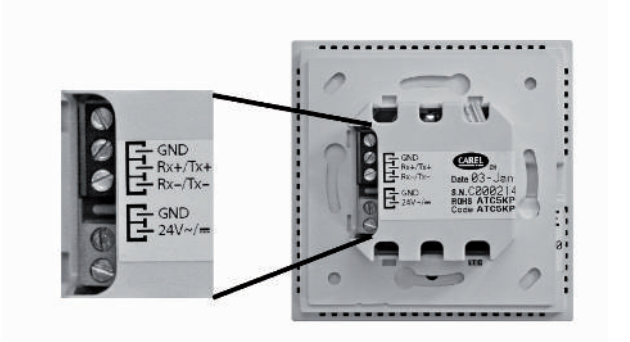

Fig. 36: KaController terminals

Electrical connection

- Connect the KaController to the nearest KaControl unit in line with the wiring diagram. The maximum bus length between the KaController and the KaControl master unit is 30 m.
- The respective KaControl automatically becomes the master unit in the control circuit when a KaController is connected to it.

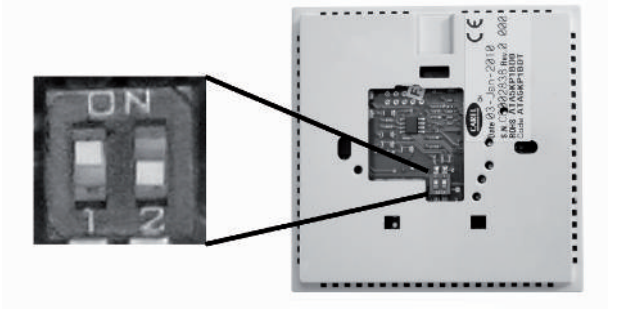

Fig. 37: DIP switch setting on KaController

DIP switch setting

The DIP switches on the rear of the KaController should be set according to the illustration:

- DIP switch 1: ON
- DIP switch 2: OFF

7.3.2 Connection (*C1)

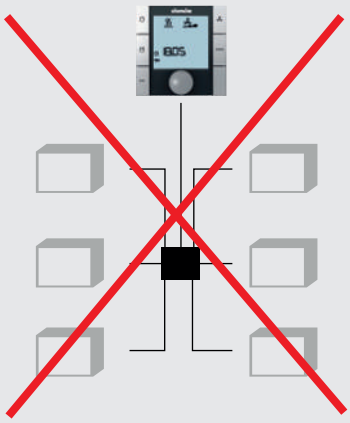

Wrong!

Star-shaped wiring of the bus lines.

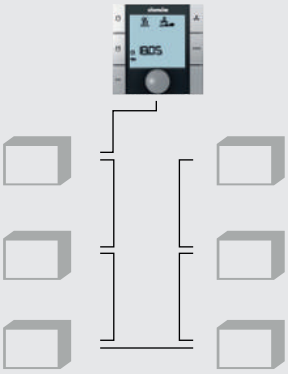

Right!

Linear wiring of the bus lines.

General information

- Route all low voltage cables along the shortest route.
- Ensure that low-voltage and power cables are separated, using metal partitions on cable harnesses.
- Use only shielded cables as low-voltage and bus cables.
- Lay all BUS cables in a linear pattern. Star-shaped wiring is not permitted.
- The KaController is connected via a bus connection to the respective control PCB on the unit.

Tab. 12: Wiring of bus lines

IMPORTANT NOTE!
Use shielded, paired cables as bus cables, UNITRONIC® BUS LD 2x2x0.22, but at least of the same value or higher.

IMPORTANT NOTE!
When laying bus cables, avoid the formation of star points, for instance in junction boxes. Loop the cables through to the units!

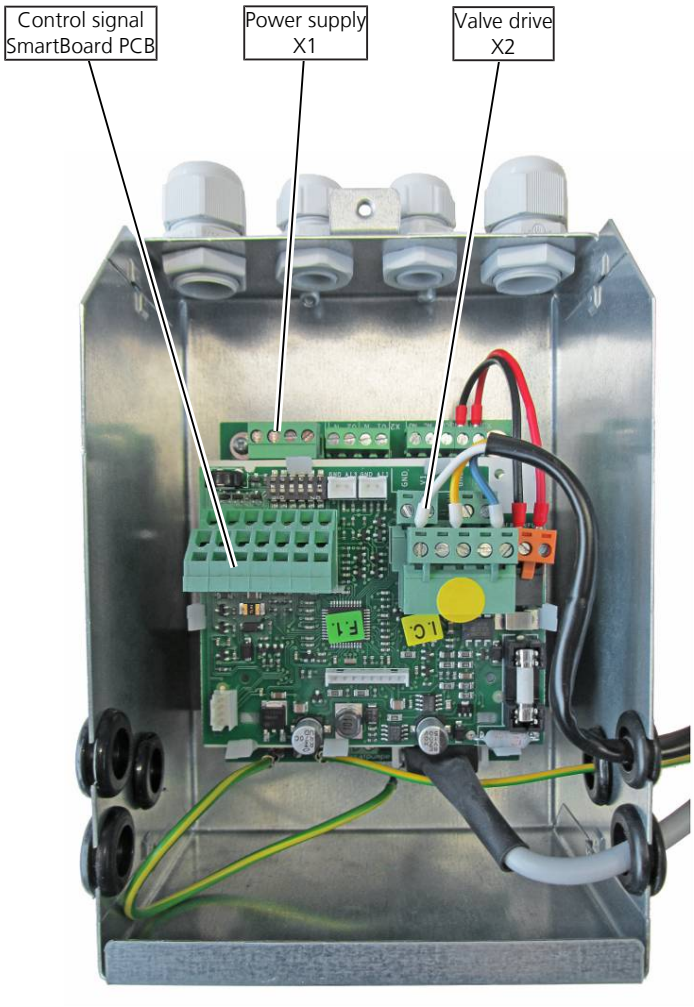

Fig. 38: Circuit board in the junction box

Description of wiring

- Units configured for operation with KaControl are fully wired and fitted with all electrical parts ready for connection (with the exception of optional accessories).
- The speed of the EC fans are controlled by a 0-10 V DC signal from the KaControl. The "intelligent" motor electronics detects any possible motor fault and automatically switches off the fan.

Note these points in the following wiring diagrams for Venkon XL with KaControl:

- Comply with the details on cable types and cabling with due consideration for VDE 0100.
- Without *: NYM-J. The requisite number of wires, including protective earth, is stated on the cable. Cross-sections are not stated, as the cable length is involved in the calculation of the cross-section.
- With *: J-Y(ST)Y 0.8mm. Lay separately from power lines.
- With **: Lay UNITRONIC BUS LD 0.22 mm² or similar separately from high-voltage cables.
- If other types of cables are used, they must be at least equivalent.
- Length of BUS cable from the KaController to unit 1: max. 30 m.
- Maximum number of parallel units: 6 units. CANbus cards type 3260301 needed for each unit (see accessories) maximum 30 no.
- Length of BUS cable from unit 1 to the last unit max. 30 m. The cable length can be increased to 500 m using CANBUS cards type 3260301 (see accessories).
- The terminals on the unit for the mains power supply are suitable for a maximum wire cross-section of 2.5 mm².
- The electrical data need to be respected when rating the in situ mains power supply and fusing.

7.3.3 Cabling, Venkon XL, KaControl (*C1), control by in situ 0-10 V DC signal

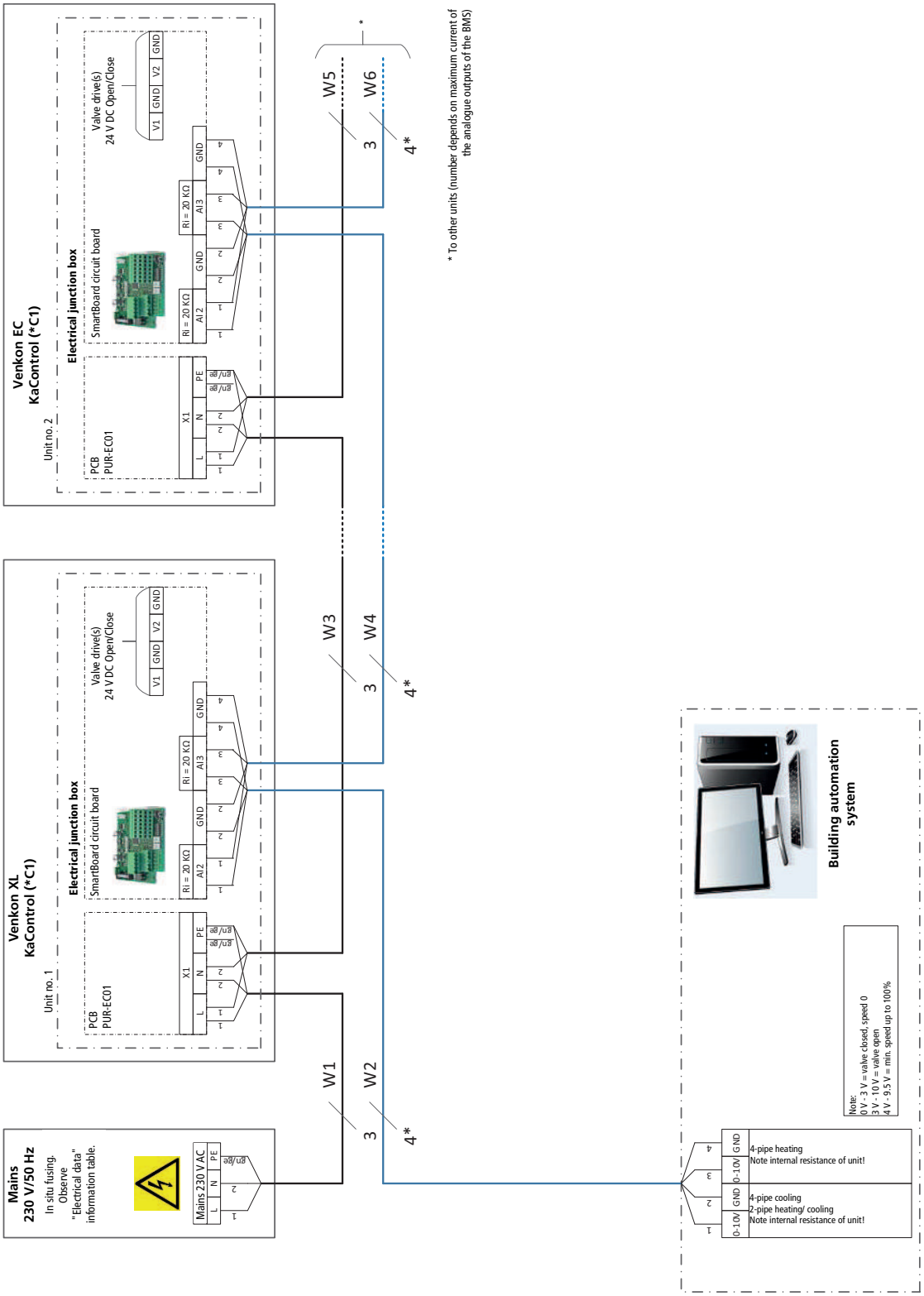

7.3.4 Cabling, Venkon XL, KaControl (*C1), control by KaController

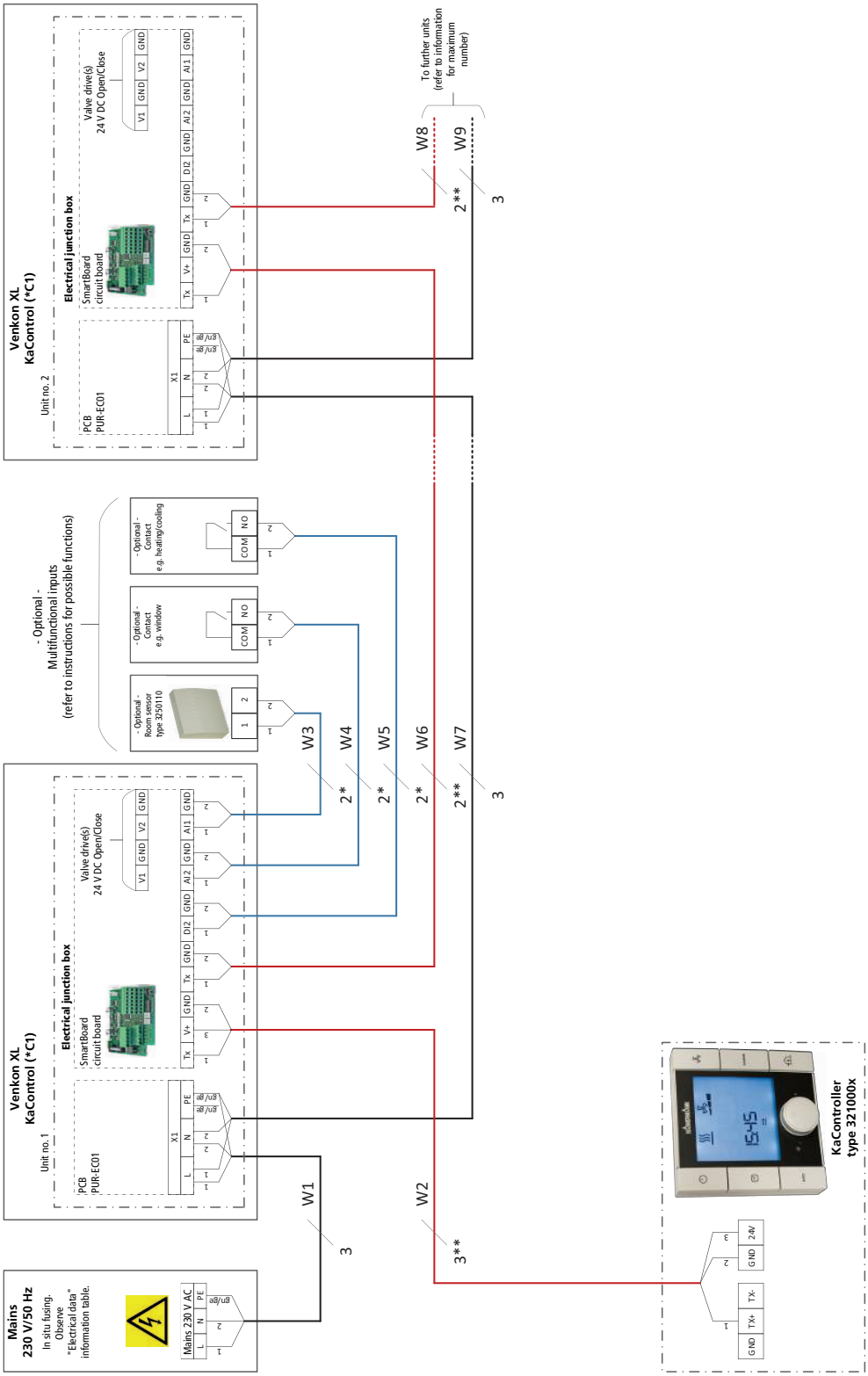

8 Pre-commissioning checks

Before initial commissioning, check whether all the necessary conditions have been met so that the unit can function safely and properly.

Structural tests
▸ Check that the unit is securely standing and fixed.
▸ Check the horizontal installation/suspension of the unit.
▸ Check the completeness and correct seating of all filters (dirt side).
▸ Check whether all components are properly fitted.
▸ Check whether all air ducts are mechanically fixed in place.
▸ Check whether all dirt, such as packaging or site dirt, has been removed.

Electrical tests
▸ Check whether all lines have been properly laid.
▸ Check whether all lines have the necessary cross-section.
▸ Are all wires connected in accordance with the electric wiring diagrams?
▸ Is the earth wire connected and wired throughout?
▸ Check all external electrical connections and terminal connections are fixed in place and tighten if necessary.
▸ Check whether DIP switches have been correctly set in accordance with the wiring diagram.

Water-side checks
▸ Check whether all supply and drainage lines have been properly connected.
▸ Fill pipes and unit with water and bleed.
▸ Check whether all bleed screws are closed.
▸ Check leak tightness (pressure test and visual inspection).
▸ Check whether the parts carrying water have been flushed through.
▸ Check whether any shut-off valves fitted on site are open.
▸ Check whether any electrically actuated shut-off valves have been properly connected.
▸ Check whether all valves and actuators are working properly (note permitted mounting position).

Air-side checks
▸ Check whether there is unimpeded flow at the air inlet and outlet.
▸ Check whether the air inlet filter is fitted and dirt-free.

Condensation water connection
▸ Check whether the condensation tray is free of building rubble.
▸ Check the condensation drain and operation of the alarm signal on the condensation pump.
▸ Check whether the cooling valve switches off in the event of an alarm signal.
▸ Check whether the unit is connected leak-free to the on-site condensation connection.
▸ Check whether the waste water lines are clean and have a sufficient gradient.
▸ Check whether the condensation pump has a working power supply.

Once all checks have been completed, initial commissioning can be carried out in line with Chapter 9 “Operation” [▸ 50].

9 Operation

9.1 Operation of electromechanical control

 Fig. 39: Room thermostat, type 30155	**Room thermostat, type 30155** ▸ Electronic room thermostat with 3-stage automatic function for 2- and 4-pipe applications, surface-mounted wall installation on a flush-mounted box in visually unobtrusive design ▸ simple operation using a large rotary dial for temperature setting with mechanical range limitation of the temperature setpoint, operating mode selector switch, Standby, Manual fan, Automatic fan, 3-stage switch for pre-selecting the fan speed when the operating mode selector switch is in the "Manual fan" position ▸ option for external room sensor connection ▸ control input for heating/cooling changeover with 2-pipe applications ▸ digital input can be set to Comfort/ECO or ON/OFF switchover
 Fig. 40: Clock thermostat type 30256	**Clock thermostat 230 V, type 30256** ▸ Electronic clock thermostat for 2- and 4-pipe applications, surface-mounted wall installation on a flush-mounted box in visually unobtrusive design ▸ Operation using 4 sensor keys ▸ Timer with automatic summer/winter changeover ▸ Option for external room sensor ▸ Control input for heating/cooling changeover with 2-pipe applications ▸ Digital input can be set to Comfort/ECO or ON/OFF switchover ▸ Parallel operation of 2 units is possible

 Fig. 41: Clock thermostat, type 30456	**Clock thermostat 24 V, type 30456** ▸ Electronic clock thermostat for 2- and 4-pipe applications, surface-mounted wall installation on a flush-mounted box in visually unobtrusive design ▸ operation using 4 sensor keys ▸ timer with automatic summer/winter switch-over ▸ option for external room sensor connection ▸ control input for heating/cooling changeover with 2-pipe applications ▸ digital input can be set to Comfort/ECO or ON/OFF switchover ▸ parallel operation of 5 units is possible
 Fig. 42: Climate controller type 196000148941	**Climate controller, white, type 196000148941** ▸ for 2- and 4-pipe applications, surface-mounted wall installation on a flush-mounted box with a visually unobtrusive design with 2.5″ LCD display and high-quality glass finish with capacitive keys ▸ automatic LED backlight ▸ parametrisable language: German or English ▸ timer program with 3 time channels, each with 4 switch-over points ▸ option to connect an external room sensor ▸ 3 control inputs (functions parametrisable, e.g. window contact, presence detector, heating/cooling switchover)

 Fig. 43: Climate controller type 196000148942	**Climate controller, black, type 196000148942** ‣ for 2- and 4-pipe applications, surface-mounted wall installation on a flush-mounted box with a visually unobtrusive design with 2.5″ LCD display and high-quality glass finish with capacitive keys ‣ automatic LED backlight ‣ parametrisable language: German or English ‣ timer program with 3 time channels, each with 4 switch-over points ‣ option to connect an external room sensor ‣ 3 control inputs (functions parametrisable, e.g. window contact, presence detector, heating/cooling switchover)
 Fig. 44: Climate controller type 196000148943	**Climate controller, white, type 196000148943** ‣ with Modbus interface ‣ for 2- and 4-pipe applications, surface-mounted wall installation on a flush-mounted box with a visually unobtrusive design with 2.5″ LCD display and high-quality glass finish with capacitive keys ‣ automatic LED backlight ‣ parametrisable language: German or English ‣ timer program with 3 time channels, each with 4 switch-over points ‣ Modbus-RTU interface as a slave device ‣ option to connect an external room sensor ‣ 2 control inputs (functions parametrisable, e.g. window contact, presence detector, heating/cooling switchover)

Fig. 45: Climate controller type 196000148944

Climate controller, black, type 196000148944

- with Modbus interface
- for 2- and 4-pipe applications, surface-mounted wall installation on a flush-mounted box with a visually unobtrusive design with 2.5" LCD display and high-quality glass finish with capacitive keys
- automatic LED backlight
- parametrisable language: German or English
- timer program with 3 time channels, each with 4 switch-over points
- Modbus-RTU interface as a slave device
- option to connect an external room sensor
- 2 control inputs (functions parametrisable, e.g. window contact, presence detector, heating/cooling switchover)

9.2 Operation of the KaController

The following information is limited to the key content on the operation of the KaController and KaControl system. More information is included separately in the KaControl SmartBoard user manual.

9.2.1 Function keys, display elements

All menus can be selected and set using the navigator dial.

The LED background lighting is automatically switched off 5 seconds after the KaController is last used. The LED background lighting can be permanently disabled using a parameter setting.

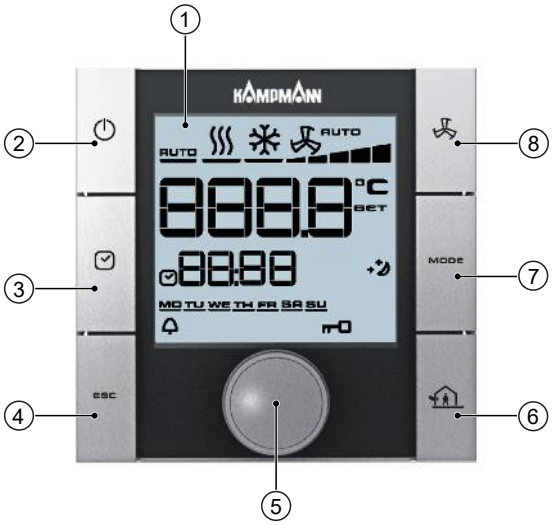

Fig. 46: KaController with function keys, type 3210002

1	Display with LED background lighting	2	ON/OFF key (depending on setting) ▸ ON/OFF ▸ Eco mode/Day mode (factory setting)
3	TIMER button ▸ Set time ▸ Set timer programs	4	ESC button ▸ back to standard view
5	Navigator dial ▸ Change settings ▸ Call up menus	6	House symbol ▸ External ventilation
7	MODE button ▸ Set operating modes (disabled with 2-pipe applications)	8	FAN button ▸ Set fan control

 Fig. 47: KaController type 3210001	KaController without operating keys (one-button operation) type 3210001 1. Display with LED background lighting 2. Navigator dial ▸ Change settings ▸ Call up menus
 Fig. 48: KaController black, type 3210006	KaController, black without function keys (one-button operation) type 3210006 1. Display with LED background lighting 2. Navigator dial ▸ Change settings ▸ Call up menus

The symbols shown on the display depend on the application (2-pipe, 4-pipe etc.) and the parameters set.

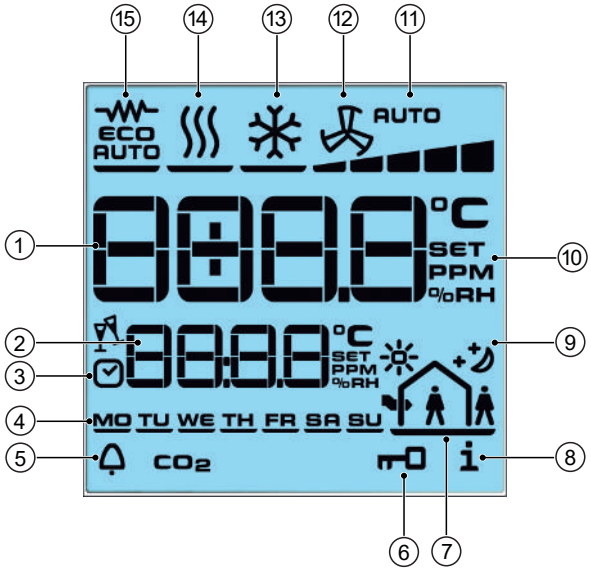

Fig. 49: Display

1	Display of setpoint room temperature	2	Current time
3	Timer program enabled	4	Weekday
5	Alarm	6	Selected function is locked
7	"External ventilation" mode is locked	8	Filter alert
9	Eco mode	10	Setpoint setting enabled
11	Fan control setting Auto-0-1-2-3-4-5	12	Ventilation mode
13	Cooling mode	14	Heating mode
15	Automatic Heating/Cooling changeover mode		

10 Maintenance

10.1 Securing against reconnection

DANGER!

Risk of death by unauthorised or uncontrolled restart!

Unauthorised or uncontrolled restarting of the equipment can result in serious injury or death.

- Before restarting, ensure that all safety devices are fitted and working properly and that there is no hazard to humans.

Always follow the procedure described below to prevent accidental restart:

1. de-energise.
2. Prevent accidental re-connection.
3. Check that the equipment is de-energised.
4. Cover and cordon off adjacent live parts.

WARNING!

Risk of injury from rotating parts!

The fan impeller can cause severe injuries.

- Switch off the unit and prevent it from reconnection before commencing any work on moving components of the fan. Wait until all parts have come to a standstill.

10.2 Maintenance Schedule:

The sections below describe maintenance work needed for the proper and trouble-free operation of the equipment.

If there are signs of increased wear during regular checks, shorten the required maintenance intervals to the actual wear and teat. Contact the manufacturer with any questions about maintenance work and intervals.

Interval	Maintenance task	Personnel
As required	Regular visual checks and acoustic checks for damage, dirt and function.	User
quarterly	Check filter for dirt, clean and change filter when needed.	User
every six months	Clean unit components (heat exchanger, condensate tray, condensate pump, float switch).	User
every six months	Check water-side connections, valves and fittings for dirt, leak-tightness and function.	User
every six months	Check the electrical wiring.	Qualified personnel
every six months	Clean components/surfaces that come into contact with air.	Qualified personnel
quarterly	Check the heat exchanger for dirt, damage, corrosion and leak-tightness. Carefully vacuum the heat exchanger if dirty.	User
quarterly	Check the condensation tray, float switch and drain connection for dirt, damage and leak-tightness. Remove any condensation deposits that have accumulated.	User

10.3 Maintenance work

Dismantle the service hatch before maintenance work!

Remove the service hatch before all visual inspections and maintenance work to access the basic unit.

10.3.1 Opening the inspection flap

 Fig. 50: Opening the latch	Use a square wrench to turn the latch 90° (refer to the arrow on the latch for the closing direction).
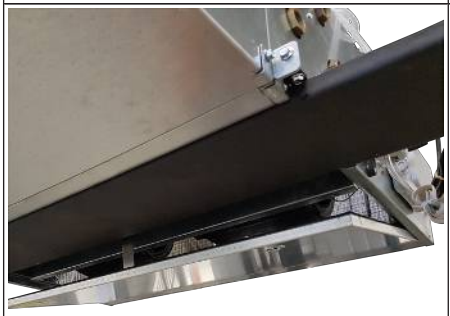 Fig. 51: Lowering the service hatch	Carefully lower the service hatch until the safety hook engages.
 Fig. 52: Pressing in the retaining plate	Slightly raise the service hatch, push away the retaining plate from the condensate tray and remove the service hatch.

 Fig. 53: Inserting the service hatch	Fit the service hatch in reverse order. When inserting the service hatch, make sure that the ball-head bolts are properly inserted into the housing.

10.3.2 Replacing the filter.

CAUTION!

Risk of injury from sharp metal housing!

The inner metal of the casing can have sharp edges.

- Wear suitable protective gloves.

 Fig. 54: Turning the filter latches	Turn filter latches (left and right) to the side using a flat-blade screwdriver.
 Fig. 55: Removing the filter	Remove filter downwards. Wash out the ISO Coarse filter or replace it if necessary. Dispose of and replace filters ISO ePM10>50%.

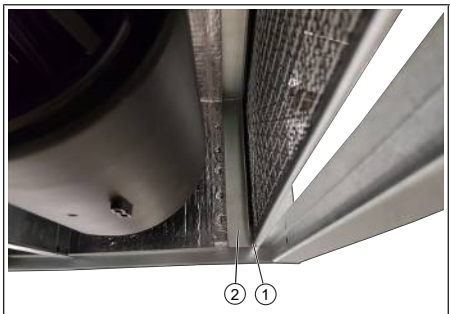 Fig. 56: Filter positions 1 Dry layer filter, ISO Coarse 2 Cassette filter ISO ePM10>50%	The cassette filter ISO ePM10>50% is replaced in the same way as the dry layer filter ISO Coarse.

10.3.3 Cleaning the condensate tray

Before cleaning the condensate tray Opening the inspection flap [▸ 57]. Steps 1 – 3 are only necessary if a condensate pump (optional accessory) has been installed.

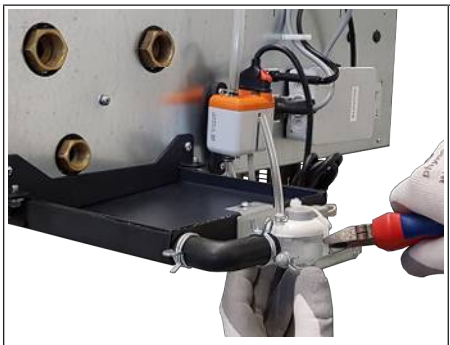 Fig. 57: Loosening the cable ties	Pinch off the cable ties.
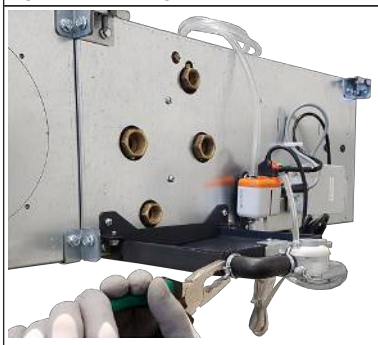 Fig. 58: Loosening the wire retention clamp	Loosen the wire retention clamp at the drain connection of the condensate tray.

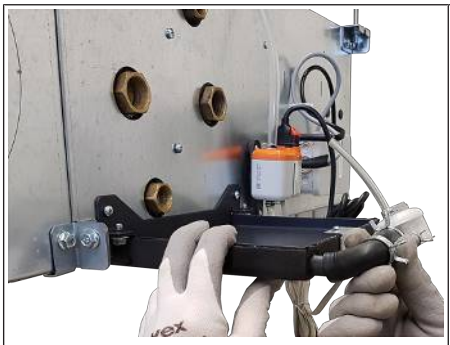 Fig. 59: Pulling off the angle fitting	Carefully remove the angle fitting from the condensate tray. Then check the float switch for dirt and clean if necessary.
 Fig. 60: Loosen screw	Use a suitable tool to turn the M6x10 self-locking screw out of the condensate tray holder.
 Fig. 61: Loosening and holding the condensate tray	Using a suitable tool to turn the M6x10 self-locking screw out of the condensate tray holder, supporting the condensate tray and preventing it from falling.
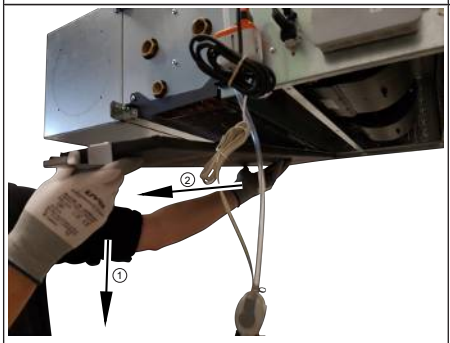 Fig. 62: Remove the condensate tray	Allow the condensate tray to fall slightly on the connection side ① and pull it out of the side of the housing at an angle ② .

 Fig. 63: Cleaning the condensate tray	Clean the condensation tray.
 Fig. 64: Fitting the condensate tray	Fit the condensate tray in reverse order. When inserting the condensate tray, make sure that the ball-head bolts are properly inserted into the housing.

IMPORTANT NOTE!

Replace the float switch!

When using a condensate pump, it is essential that the float switch is replaced and secured by a cable tie (by others) after cleaning!

10.3.4 Clean the inside of the unit

Check all elements that come into contact with air (internal surfaces of the unit, outlet elements etc.) for dirt or deposits during maintenance and use a commercially available product to remove.

11 Faults

The following chapter describes possible causes of faults and the work needed to rectify them. Should faults occur frequently, shorten the maintenance intervals in line with the actual loading on the unit.

Contact the manufacturer with any faults that cannot be rectified using the following information.

Behaviour in the event of faults

The following applies:

1. Immediately switch off the unit with faults that pose an immediate danger to persons or property!
2. Determine the cause of the fault!
3. Switch off the unit and prevent it from being reconnected if rectifying the fault requires work in the hazard area. Immediately advise a supervisor on site about the fault.
4. Either rectify the fault yourself or have it repaired by authorised personnel, depending on the nature of the fault.

The Fault table [▸ 62] provides information on who is authorised to rectify and remedy faults.

11.1 Fault table

Fault	Possible cause	Remedy
No function.	No power supply.	Check voltage, switch on repair switch.
		Replace fuse.
Water outlet	Fault on the heat exchanger.	Replace the heat exchanger if you need to.
	Hydraulic connection not properly done.	Check flow and return and tighten, if necessary.
Water outlet	Condensate drain outlets blocked.	Clean condensate outlets and check for adequate gradient.
	Chilled water line incorrectly insulated.	Check insulation.
	Condensate drain not properly installed.	Check correct operation of condensate pump. Check and clean condensate outlet.
	Accessory components carrying air not properly insulated.	Check insulation.
Unit not heating or cooling sufficiently (LPHW/CHW)	Fan is not switched on.	Switch on fan at controller.
	Air volume is too low.	Set a higher speed.
	Filter is dirty.	Replace filter.
	No heating or cooling medium.	Switch on heating and/or cooling system, switch on circulation pump, vent unit/system.
	Valves not operating.	Replace faulty valves.
	Water volume too low.	Check pump output, check hydraulics.
	Setpoint temperature on the controller set too low/high.	Adjust temperature setting on the controller.
	Operating unit with integral sensor and/or external sensor is exposed to direct sunlight or positioned over a heat source.	Place operating unit with integral sensor and/or external sensor in a suitable position.
	Air cannot blow out or in freely.	Remove obstacles at the air outlet/air inlet.
	Heat exchanger dirty.	Clean heat exchanger.
	Air in the heat exchanger.	Vent heat exchanger.
Unit too loud	Speed too high.	Set a lower speed, if possible.
	Air inlet/outlet opening is obstructed.	Free air ducts.
	Filter dirty.	Replace filter.

Fault	Possible cause	Remedy
	Rotating parts unbalanced	Clean and/or replace impeller. Please make sure that no balancing clips are removed during cleaning.
	Fan dirty.	Clean dirt from fan.
	Heat exchanger dirty.	Clean dirt from Heat exchanger.

11.2 KaControl faults

Code	Alarms	Priority
A11	Faulty control sensor.	1
A12	Motor fault.	2
A13	Room frost protection.	3
A14	Condensation alarm.	4
A15	General alarm.	5
A16	Sensor AI1, AI2 or AI3 faulty.	6
A17	Unit frost protection.	7
A18	EEPROM error.	8
A19	Offline slave in the CAN bus network.	9

Tab. 13: KaControl unit alarms

Code	Alarms
tAL1	Temperature sensor in the KaController faulty.
tAL3	Real-time clock in the KaController faulty.
tAL4	EEPROM in the KaController faulty.
Cn	Communication fault with the external control.

Tab. 14: KaController alarms

IMPORTANT NOTE!

Important note!
More information on control settings can be found in the separate KaControl SmartBoard user manual.

11.3 Start-up after rectification of fault

After correction of the fault, carry out the following steps for recommissioning:

1. Make sure that all maintenance covers and access openings are sealed.
2. Switch off the unit.
3. Acknowledge the fault on the controller, if necessary.

12 List of KaControl parameters

12.1 Venkon XL parameter list

Parameter	Function	Standard	Min.	Max.	Unit	Venkon XL*
P000	Software version	24	0	255	-	24
P001	Base setpoint for setpoint input ± 3K	22	8	32	°C	22
P002	Switching on / off hysteresis for valves	3	0	255	K/10	1
P003	Neutral zone in a 4-pipe system (only in automatic mode)	3	0	255	K/10	3
P004	Cooling without fan assistance (natural convection)	0	0	255	K/10	0
P005	Heating without fan assistance (natural convection)	5	0	255	K/10	3
P006	Fan On/Off hysteresis (only in ventilation mode)	5	0	255	K/10	5
P007	P-band, heating	20	0	100	K/10	17
P008	P-band, cooling	20	0	100	K/10	20
P009	Offset to the base setpoint for setpoint input ± 3K	3	0	10	C	3
P010	Clip-on sensor: limit temperature to enable fan stages 1 and 2 in heating mode	26	0	255	°C	26
P011	Clip-on sensor: limit temperature to enable fan stages 3 and 4 in heating mode	28	0	255	°C	28
P012	Clip-on sensor: limit temperature to enable fan stage 5 in heating mode	30	0	255	°C	30
P013	Clip-on sensor: hysteresis for limit temperatures P010, P011, P012, P014	10	0	255	K/10	10
P014	Clip-on sensor: limit temperature for enabling the fan stages in cooling mode	18	0	255	°C	18
P015	Function of input AI1	0	0	19	-	0
P016	Function of input AI2	0	0	19	-	0
P017	Function of input AI3	0	0	9	-	0
P018	Temperature increase of cooling setpoint in Eco mode	30	0	255	K/10	30
P019	Temperature decrease of heating setpoint in Eco mode	30	0	255	K/10	30
P020	ADC limit coefficient	6	0	15	-	6
P021	ADC average coefficient	6	0	15	-	6
P022	Activation/disabling of sun symbol in Comfort mode	0	0	1	-	0
P023	Difference for compensation during cooling	0	-99	127	K/10	0
P024	Coefficient for compensation during heating	0	-20	20	1/10	0
P025	Difference for compensation during heating	0	-99	127	K/10	0
P026	Coefficient for compensation during heating	0	-20	20	1/10	0
P027	Fan setting: maximum run-time for manual fan mode	0	0	255	min	0
P028	Flushing function: fan stage during the flushing function	2	1	5	-	2
P029	Activation of continuous fan mode	0	0	1	-	0
P030	Vent temperature enable	12	0	255	°C	12
P031	Vent interval	27	0	255	°C	27
P032	Flushing function: maximum idle time of fan	15	0	255	min	15
P033	Flushing function: duration of flushing function	120	0	255	s	120
P034	Flushing function: activation in operating modes	0	0	3	-	0
P035	Fan run-on time after operating mode is switched to stage 1	0	0	255	s	0

Parameter	Function	Standard	Min.	Max.	Unit	Venkon XL*
P036	Type of setpoint	0	0	1	-	0
P037	Display	1	0	7	-	1
P038	Lock/disable function on control unit	72	0	255	-	72
P039	Function of digital output V2 (in 2-pipe system)	0	0	3	-	0
P040	Valve actuation via pulse width modulation	0	0	1	-	0
P041	Reset time of PI controller to activate the fan in automatic fan mode	0	0	20	min	0
P042	Fan setting: lock and activate fan stages	0	0	127	-	0
P043	Function of digital input DI1	0	0	22	-	12
P044	Function of digital input DI2	0	0	22	-	0
P045	Threshold voltage for potentiometer, which switches on unit	10	0	100	kOhm	10
P046	Temperature setting corresponds to minimum resistance value = 10 kOhm in the potentiometer	18	12	34	°C	18
P047	Temperature setting corresponds to maximum resistance value = 100 kOhm in the potentiometer	24	13	35	°C	24
P048	Threshold voltage for potentiometer for starting up fans	10	0	100	kOhm	10
P049	Threshold voltage for potentiometer for maximum fan speed	90	0	100	kOhm	90
P050	Fan setting: max. fan speed	100	0	100	%	100
P051	Fan setting: min. fan speed	0	0	90	%	0
P052	Fan setting: enable speed limit	0	0	1	-	0
P053	Valve activation via pulse width modulation of valve switching cycle	15	10	30	min	15
P054	Configuration of bus system	0	0	2	-	0
P055	Display of heating/cooling symbols in automatic mode	0	0	1	-	1
P056	DI2 setting (polarity) when DIP 4 = ON	1	0	1	-	1
P057	Reset setpoint to the value of P01 (after changing an operating program)	0	0	1	-	0
P058	Sensor calibration: sensor AI1	0	-99	127	K/10	0
P059	Supply air temperature setpoint in heating mode	35	0	50	°C	35
P060	Supply air temperature setpoint in cooling mode	18	0	50	°C	18
P061	Sensor calibration: sensor in the KaController	0	-99	127	K/10	0
P062	Sensor calibration: sensor AI2	0	-99	127	K/10	0
P063	Outside temperature <P63 fan increase by P122	0	-99	127	°C	0
P064	Sensor calibration: sensor AI3	0	-99	127	K/10	0
P065	reserved	-	-	-	-	-
P066	Master/Slave assignment in CAN bus	0	0	1	-	0
P067	Serial CAN bus address	1	1	125	-	1
P068	Logic of hydronic algorithms	0	0	7	-	0
P069	Network address	1	0	207	-	1
P070	Dependence of the hydronic algorithms (on Slaves)	0	0	7	-	0
P071	Serial address of Slave 1	0	0	207	-	0
P072	Serial address of Slave 2	0	0	207	-	0
P073	Serial address of Slave 3	0	0	207	-	0
P074	Serial address of Slave 4	0	0	207	-	0
P075	Serial address of Slave 5	0	0	207	-	0

Parameter	Function	Standard	Min.	Max.	Unit	Venkon XL*
P076	Serial address of Slave 6	0	0	207	-	0
P077	Serial address of Slave 7	0	0	207	-	0
P078	Serial address of Slave 8	0	0	207	-	0
P079	Serial address of Slave 9	0	0	207	-	0
P080	Serial address of Slave 10	0	0	207	-	0
P081	Dependence of the hydronic algorithms, Slave 1	0	0	7	-	0
P082	Dependence of the hydronic algorithms, Slave 2	0	0	7	-	0
P083	Dependence of the hydronic algorithms, Slave 3	0	0	7	-	0
P084	Dependence of the hydronic algorithms, Slave 4	0	0	7	-	0
P085	Dependence of the hydronic algorithms, Slave 5	0	0	7	-	0
P086	Dependence of the hydronic algorithms, Slave 6	0	0	7	-	0
P087	Dependence of the hydronic algorithms, Slave 7	0	0	7	-	0
P088	Dependence of the hydronic algorithms, Slave 8	0	0	7	-	0
P089	Dependence of the hydronic algorithms, Slave 9	0	0	7	-	0
P090	Dependence of the hydronic algorithms, Slave 10	0	0	7	-	0
P091	Load default values	0	0	255	-	0
P092	Password management	0	0	255	-	0
P093	Type of pre-comfort (room occupancy)	0	0	3	-	0
P094	Pre-comfort timer	60	1	255	min	60
P095	Disable DIP switch settings	0	0	1	-	0
P096	Digital outputs continuously activated	0	0	1	-	0
P097	Read DIP switch	-	0	63	-	-
P098	Activation 0..10V: switch on limit for valves	30	0	100	V/10	30
P099	Activation 0..10V: min. switch on limit for fan speed	40	0	100	V/10	40
P100	Activation 0..10V: max. switch on limit for fan speed	90	0	100	V/10	90
P101	Valve activation by pulse width modulation of P-band in heating mode	15	0	100	K/10	15
P102	Valve activation by pulse width modulation of P-band in cooling mode	15	0	100	K/10	15
P103	Valve activation by pulse width modulation of reset time of PI controller	0	0	20	min	0
P104	Minimum ON time with valve activation PWM	3	0	20	min	3
P105	Compensation: max. negative delta setpoint	50	0	150	K/10	50
P106	Compensation: max. positive delta setpoint	50	0	150	K/10	50
P107	Duration of valve open to check water temperature	5	0	255	min	5
P108	Duration of valve closed	240	35	255	min	240
P109	Dead zone PI control for 3-way valve	10	0	100	K/10	10
P110	Hysteresis to switch between heating/fan operation	0	0	20	°C	0
P111	Threshold for switching between heating/fan operation	0	0	50	°C	0
P112	reserved	-	-	-	-	-
P113	reserved	-	-	-	-	-
P114	reserved	-	-	-	-	-
P115	reserved	-	-	-	-	-
P116	reserved	-	-	-	-	-
P117	Lock function buttons on KaController	0	0	7	-	0
P118	On delay time	0	0	255	sec	0

Parameter	Function	Standard	Min.	Max.	Unit	Venkon XL*
P119	Off delay time	0	0	255	sec	0
P120	reserved	-	-	-	-	-
P121	reserved	-	-	-	-	-
P122	Relative fan speed increase via contact	2	0	5	-	2
P123	Maximum valve running time	150	0	255	sec	150
P124	Minimum P + I output variation for valve motion (0 to 10)	5	0	100	%	5
P125	reserved	-	-	-	-	-
P126	Weeks of operation	0	0	255	week	0
P127	Info weeks of operation reached (filter message)	0	52	255	week	0
P128	Reset weeks of operation counter	0	0	1	-	0
P129	Fan speed limiter activation in certain operating modes	0	0	1	-	0
P130	Absolute fan speed increase via contact	2	0	5	-	2
P131	External ventilation, delay time	0	0	255	min	0
P132	Operating level, master password	22	0	255	-	22
P133	Hysteresis for outside temperature for switching between heating/fan mode	0	0	255	K/10	0
P134	Threshold for outside temperature for switching between heating/fan mode	0	0	50	°C	0
P135	Enable virtual sensor	0	0	1	-	0
P136	Enable external ventilation	0	0	2	-	0

Tab. 15: Parameter key, SAP no. 9001293, dated 03.12.2019

12.2 KaController parameter list

Para-meter	Function	Standard	Min.	Max.	Unit	Comment
t001	Serial address	1	0	207	-	Address in Mod-bus network
t002	Baud rate 0 = Baud rate 4800 1 = Baud rate 9600 2 = Baud rate 19200	2	0	2	-	
t003	Background lighting function 0 = Slow fade in, fast fade out 1 = Slow fade in, slow fade out 2 = Fast fade in, fast fade out	0	0	2	-	
t004	Strong background lighting	4	0	5	-	
t005	Sensor calibration of KaController sensor	0	60	60	°C	
t006	LCD display contrast	15	0	15	-	
t007	BEEP setting 0 = BEEP ON 1 = BEEP OFF	0	0	1	-	
t008	Password for KaController Parameter menu	11	0	999	-	
t009	Minimum settable setpoint temperature	8	0	20	°C	
t010	Maximum settable setpoint temperature	35	10	40	°C	
t011	Interval of setpoint setting	0	0	2	-	

Para-meter	Function	Standard	Min.	Max.	Unit	Comment
	0 = Automatic setting depending on PCB (parameterisable, freely programmable) 1 = Increment of 1 (parametrisable PCBs) 2 = Increment of 0.5 (freely programmable PCBs)					
t012	Date/Time setting: Year	9	0	99	-	
t013	Date/Time setting: Month	1	1	12	-	
t014	Date/Time setting: Day	1	1	31	-	
t015	Date/Time setting: Weekday	1	1	7	-	
t016	Date/Time setting: Hour	0	0	23	-	
t017	Date/Time setting: Minute	0	0	59	-	

13 Certificates

EU-Konformitätserklärung

EU Declaration of Conformity
Déclaration de Conformité CE
Deklaracja zgodności CE
EU prohlášení o konformite

Wir (Name des Anbieters, Anschrift):
We (Supplier's Name, Address):
Nous (Nom du Fournisseur, Adresse):
My (Nazwa Dostawcy, adres):
My (Jméno dodavatele, adresa):

KAMPMANN GMBH & Co. KG
Friedrich-Ebert-Str. 128-130
49811 Lingen (Ems)

erklären in alleiniger Verantwortung, dass das Produkt:
declare under sole responsibility, that the product:
déclarons sous notre seule responsabilité, que le produit:
deklarujemy z pełną odpowiedzialnością, że produkt:
deklarujeme, vědomi si své odpovědnosti, že produkt:

Type, Modell, Artikel-Nr.:
Type, Model, Articles No.:
Type, Modèle, N° d'article:
Typ, Model, Nr artykułu:
Typ, Model, Číslo výrobku:

Venkon XL **3480*3*000; 3480*3*00D; 3480*3*0C1; 3480*3*0C1D**

auf das sich diese Erklärung bezieht, mit der / den folgenden Norm(en) oder normativen Dokumenten übereinstimmt:
to which this declaration relates is in conformity with the following standard(s) or other normative document(s):
auquel se réfère cette déclaration est conforme à la (aux) norme(s) ou autre(s) document(s) normatif(s):
do którego odnosi się niniejsza deklaracja, jest zgodny z następującymi normami lub innymi dokumentami normatywnymi:
na který se tato deklarace vztahuje, souhlasí s následující(mi) normou/normami nebo s normativními dokumenty:

DIN EN 1397	**Wasserübertrager – Wasser-Luft-Ventilatorkonvektoren – Prüfverfahren zur Leistungsfeststellung**
DIN EN 55014-1; -2	**Elektromagnetische Verträglichkeit**
DIN EN 61000-3-2; -3-3	**Elektromagnetische Verträglichkeit**
DIN EN 61000-6-1; -6-2; -6-3	**Elektromagnetische Verträglichkeit**
DIN EN 60335-1; -2-40	**Sicherheit elektr. Geräte f. den Hausgebrauch und ähnliche Zwecke**

Gemäß den Bestimmungen der Richtlinien:
Following the provisions of Directive:
Conformément aux dispositions de Directive:
Zgodnie z postanowieniami Dyrektywy:
Odpovídající ustanovení směrnic:

2014/30/EU	**EMV-Richtlinie**
2014/35/EU	**Niederspannungsrichtlinie**

Hendrik Kampmann

Lingen (Ems), den 01.09.2020

Ort und Datum der Ausstellung
Place and Date of Issue
Lieu et date d'établissement
Miejsce i data wystawienia
Místo a datum vystavení

Name und Unterschrift des Befugten
Name and Signature of authorized person
Nom et signature de la personne autorisée
Nazwisko i podpis osoby upoważnionej
Jméno a podpis oprávněné osoby

Kampmann GmbH & Co. KG
Friedrich-Ebert-Straße 128–130
49811 Lingen (Ems)

Registergericht: Osnabrück, HRA 205688
USt-IdNr: DE313505294
Kampmann.de

Persönlich haftende Gesellschafterin:
Kampmann Beteiligungsgesellschaft mbH
Sitz: Lingen (Ems)

Registergericht: Osnabrück, HRB 211684
Geschäftsführer: Hendrik Kampmann

Information requirements for fan coils according to regulation (EU) No 2016/2281
Informationsanforderungen für Fan Coils gemäß Verordnung (EU) Nr. 2016/2281

Venkon XL **heating and cooling** Heizen und Kühlen **2-pipe unit** 2-Rohrsystem		**cooling capacity (sensible)** Kühlleistung (sensibel)	**cooling capacity (latent)** Kühlleistung (latent)	**Heating capacity** Wärmeleistung	**Total electric power input** Elektrische Gesamtleistungsaufnahme	**Sound power level (per speed setting, if applicable)** Schallleistungspegel (ggf. je Geschwindigkeits-einstellung)
Model size Baugöße	**Fan** Ventilator	$P_{rated,c}$	$P_{rated,c}$	$P_{rated,h}$	P_{elec}	L_{WA}
		kW	kW	kW	kW	dB (A)
1	EC	2,9	1,5	4,8	0,085	63
2	EC	6,2	1,7	10,4	0,167	67
3	EC	9,4	1,7	15,7	0,281	68
4	EC	12,9	4,0	21,3	0,353	70

Standard rating conditions for fan coil units according to regulation (EU) No 2016/2281						
Norm-Prüfbedingungen für Gebläsekonvektoren gemäß Verordnung (EU) Nr. 2016/2281						
Cooling Test	**Air temperature**	**27 °C (dry bulb)** **19 °C (wet bulb)**	**Inlet water temperature**	**7 °C**	**Water temperature rise**	**5 °C**
Test Kühlbetrieb	Luft-temperatur	27 °C (Trockenkugel) 19 °C (Feuchtkugel)	Wassertemperatur am Einlass		Anstieg der Wassertemperatur	
Heating Test	**Air temperature**	**20 °C (dry bulb)**	**Inlet water temperature**	**45 °C for 2-pipe units** **65 °C for 4-pipe units**	**Water temperature decrease**	**5 °C for 2-pipe units** **10 °C for 4-pipe units**
Test Heizbetrieb	Luft-temperatur	20 °C (Trockenkugel)	Wassertemperatur am Einlass	45 °C für 2-Rohrsysteme 65 °C für 4-Rohrsysteme	Sinken der Wassertemperatur	5 °C für 2-Rohrsysteme 10 °C für 4-Rohrsysteme
Sound power test	**At ambient conditions without water flow**					
Test Schallleistungspegel	Bei Umgebungsbedingungen ohne Wasserdurchsatz					

Contact Details	**Kampmann GmbH**
Kontaktinformationen	Friedrich-Ebert-Straße 128-130, D-49811 Lingen (Ems), Germany

Information requirements for fan coils according to regulation (EU) No 2016/2281
Informationsanforderungen für Fan Coils gemäß Verordnung (EU) Nr. 2016/2281

Venkon XL **heating and cooling** Heizen und Kühlen **4-pipe unit** 4-Rohrsystem		**cooling capacity (sensible)** Kühlleistung (sensibel)	**cooling capacity (latent)** Kühlleistung (latent)	**Heating capacity** Wärmeleistung	**Total electric power input** Elektrische Gesamtleistungsaufnahme	**Sound power level (per speed setting, if applicable)** Schallleistungspegel (ggf. je Geschwindigkeits-einstellung)
Model size Baugöße	**Fan** Ventilator	$P_{rated,c}$	$P_{rated,c}$	$P_{rated,h}$	P_{elec}	L_{WA}
		kW	kW	kW	kW	dB (A)
1	EC	2,9	1,5	3,5	0,085	63
2	EC	6,2	1,7	7,5	0,167	67
3	EC	9,4	1,7	12,4	0,281	68
4	EC	12,9	4,0	17,1	0,353	70

Standard rating conditions for fan coil units according to regulation (EU) No 2016/2281 Norm-Prüfbedingungen für Gebläsekonvektoren gemäß Verordnung (EU) Nr. 2016/2281						
Cooling Test	**Air temperature**	**27 °C (dry bulb)** **19 °C (wet bulb)**	**Inlet water temperature**	**7 °C**	**Water temperature rise**	**5 °C**
Test Kühlbetrieb	Luft-temperatur	27 °C (Trockenkugel) 19 °C (Feuchtkugel)	Wassertemperatur am Einlass		Anstieg der Wassertemperatur	
Heating Test	**Air temperature**	**20 °C (dry bulb)**	**Inlet water temperature**	**45 °C for 2-pipe units** **65 °C for 4-pipe units**	**Water temperature decrease**	**5 °C for 2-pipe units** **10 °C for 4-pipe units**
Test Heizbetrieb	Luft-temperatur	20 °C (Trockenkugel)	Wassertemperatur am Einlass	45 °C für 2-Rohrsysteme 65 °C für 4-Rohrsysteme	Sinken der Wassertemperatur	5 °C für 2-Rohrsysteme 10 °C für 4-Rohrsysteme
Sound power test	**At ambient conditions without water flow**					
Test Schallleistungspegel	Bei Umgebungsbedingungen ohne Wasserdurchsatz					

Contact Details	**Kampmann GmbH**
Kontaktinformationen	Friedrich-Ebert-Straße 128-130, D-49811 Lingen (Ems), Germany

Table

www.kampmanngroup.com/hvac/products/fan-coils/venkon-xl

Land	Kontakt
Germany	Kampmann GmbH & Co. KG
	Friedrich-Ebert-Str. 128 - 130
	49811 Lingen (Ems)
	T +49 591/ 7108-660
	F +49 591/ 7108-173
	E export@kampmann.de
	W Kampmann.eu

Country	Contact
Great Britain	Kampmann UK Ltd.
	Dial House, Govett Avenue
	Shepperton, Middlesex, TW17 8AG
	T +44 1932/ 228592
	F +44 1932/ 228949
	E info@kampmann.co.uk
	W Kampmann.co.uk

04/22 ENSAP-Nr.1374732